www.liveline.be

Syva

owner's manual (EN)

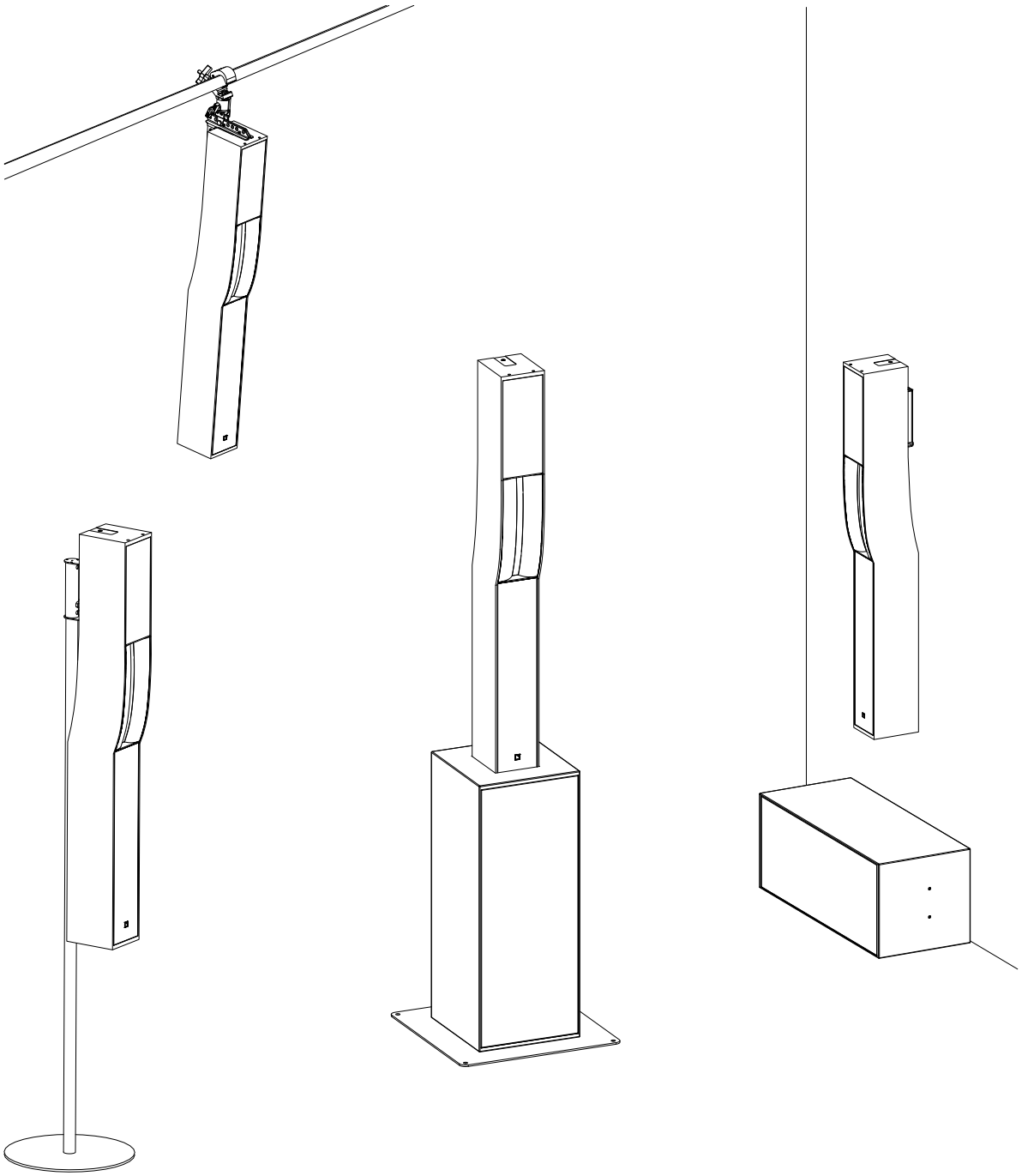

www.liveline.be

Document reference: Syva owner's manual (EN) version 1.0
Distribution date: September 12, 2022
© 2022 L-Acoustics. All rights reserved.
No part of this publication may be reproduced or transmitted in any form or by any means without the express written consent of the publisher.

www.liveline.be

Contents

Safety....5
Instructions....5
Introduction....7
Syva Colinear Source....7
How to use this manual....8
Revision history....8
System components....9
Electro-acoustical description....12
Preset description....13
Connectors....14
Rigging system description....16
Syva....16
Syva Low and Syva Sub....18
Rigging elements....19
Syva Wall....19
Syva Base....20
Syva Pole....20
Syva Bar....21
Syva Cov and SyvaLF Cov....22
Mechanical safety....23
Loudspeaker configurations....25
Syva colinear source....25
With LF extension....26
With LF extension and subwoofer....28
Inspection and preventive maintenance....31
How to do preventive maintenance....31
Rigging part inspection....32
Mechanical system overview....33
Wall-mounted with Syva Wall....34
Flown with Syva Bar and CLAMP250....35
Pole-mounted with Syva Pole....36
Stacked on Syva Low with Syva Base....37
Inspection references....38
Ball-locking pins....38

www.liveline.be

Rigging check....39
Acoustical check....40

Rigging procedures....44
Wall-mounting Syva....44
Flying Syva....48
Pole-mounting Syva....49
Stacking Syva on Syva Low....50
Mounting a truss clamp on Syva Wall....51
Storing Syva Low / Syva Sub in SyvaLF Cov....52

Connection to LA amplified controllers....53

Corrective maintenance....57
Syva....57
Cabling Syva....63
Syva Low....64
Syva Sub....67

Specifications....70

APPENDIX A: Recommendation for speaker cables....79

www.liveline.be

Safety

Instructions

Inspect the system before any deployment.

Perform safety related checks and inspections before any deployment.

Perform preventive maintenance at least once a year.

Refer to the preventive maintenance section for a list of actions and their periodicity.

Insufficient upkeep of the product can void the warranty.

If any safety issue is detected during inspection, do not use the product before performing corrective maintenance.

Check for issues. A rigging system part or fastener is missing or loose. A rigging system part exhibits: bends, breaks, broken parts, corrosion, cracks, cracks in welded joints, deformation, denting, wear, holes. A safety cue or label is missing.

Never incorporate equipment or accessories not approved by L-Acoustics.

Read all the related PRODUCT INFORMATION documents shipped with the products before exploiting the system.

Do not store the product on an unstable cart, stand, tripod, bracket, or table.

Beware of sound levels.

Do not stay within close proximity of loudspeakers in operation.

Loudspeaker systems are capable of producing very high sound pressure levels (SPL) which can instantaneously lead to permanent hearing damage to performers, production crew and audience members. Hearing damage can also occur at moderate level with prolonged exposure to sound.

Check the applicable laws and regulations relating to maximum sound levels and exposure times.

Work with qualified personnel for rigging the system.

Installation should only be carried out by qualified personnel that are familiar with the rigging techniques and safety recommendations outlined in this manual.

Ensure personnel health and safety.

During installation and set-up personnel must wear protective headgear and footwear at all times. Under no circumstances is personnel allowed to climb on a loudspeaker assembly.

Respect the Working Load Limit (WLL) of third party equipment.

L-Acoustics is not responsible for any rigging equipment and accessories provided by third party manufacturers.

Verify that the Working Load Limit (WLL) of the suspension points, chain hoists and all additional hardware rigging accessories is respected.

Respect the maximum configurations and the recommended safety precautions.

For safety issue, respect the maximum configurations outlined in this manual. To check the conformity of any configuration in regards with the safety precautions recommended by L-Acoustics, model the system in Soundvision and refer to the warnings in Mechanical Data section.

Be cautious when flying a loudspeaker configuration.

Before installing/raising the product, check each individual element to make sure that it is securely fastened to the adjacent element. Always verify that no one is standing underneath the product when it is being installed/raised. Never leave the product unattended during the installation process.

As a general rule, L-Acoustics recommends the use of secondary safety at all times.

Be cautious when ground-stacking a loudspeaker array.

Do not stack the loudspeaker array on unstable ground or surface. If the array is stacked on a structure, platform, or stage, always check that the latter can support the total weight of the array.

As a general rule, L-Acoustics recommends the use of safety straps at all times.

www.liveline.be

Risk of falling objects

Verify that no unattached items remain on the product or assembly.

Risk of tipping

Remove all rigging accessories before transporting a product or an assembly.

Take into account the wind effects on dynamic load.

When a loudspeaker assembly is deployed in an open air environment, wind can produce dynamic stress to the rigging components and suspension points.

If the wind force exceeds 6 bft (Beaufort scale), lower down and/or secure the product or the assembly.

Intended use

This system is intended for use by trained personnel for professional applications.

As part of a continuous evolution of techniques and standards, L-Acoustics reserves the right to change the specifications of its products and the content of its documents without prior notice.

Check www.l-acoustics.com on a regular basis to download the latest document and software updates.

Long term exposure to extreme conditions may damage the product.

For more information, refer to the **Products weather protection** document, available on the website.

Read the maintenance section of this document before servicing the product.

Contact L-Acoustics for advanced maintenance.

Any unauthorized maintenance operation will void the product warranty.

Before sending a product to L-Acoustics for maintenance, save all user presets to files using LA Network Manager.

This marking indicates that this product should not be disposed of with other household waste throughout the EU. To prevent possible harm to the environment or human health from uncontrolled waste disposal, recycle it responsibly to promote the sustainable reuse of material resources. To return your used device, please use the return and collection systems or contact the retailer where the product was purchased. They can take this product for environmentally safe recycling.

www.liveline.be

Introduction

Syva Colinear Source

Syva is a Colinear Source system (patented) suited to medium throw applications. It is designed for professional sound reinforcement and high-end residential applications requiring high fidelity and SPL with minimum visual impact.

The Syva enclosure features six 5" MF speakers providing usable bandwidth down to 87 Hz and three 1.75" HF diaphragm compression drivers, loaded by DOSC waveguides in a J-shaped progressive curvature. This transducer arrangement, called Colinear Source, produces an H/V 140° x 26° (+5°/-21°) directivity pattern, optimized for ultra-wide horizontal coverage with extended throw capability.

The Syva Low enclosure features two K2 12" drivers and is designed to provide low frequency contour and extended bandwidth to the Syva system (9 dB contour with a low frequency limit at 40 Hz).

The Syva Sub enclosure features one high excursion 12" driver equipped with a KS28 woofer motor and is designed to further extend the bandwidth of the system in the sub frequency domain down to 27 Hz.

Both feature a bass-reflex cabinet equipped with L-Vents, reducing turbulence and port noise at high levels while increasing LF efficiency.

L-Acoustics amplified controllers ensure advanced crossover functions, time alignment, linearization and L-Drive protection of the transducers.

Syva combines the directivity benefits of line length and the coupling of HF DOSC waveguides to achieve a narrow vertical beam that is perfectly controlled down to 300 Hz. Syva focuses energy toward the back of the audience while providing smooth down-fill coverage to the front. Throw and SPL consistency are ensured from front, to back. The combination of extended 35 m throw and ultrawide horizontal dispersion provides exceptional surface coverage for flat audiences.

The cabinet combines the remarkable acoustic properties of birch and beech plywood. Its slim elegance makes for easy integration. RAL colors allow it to blend into any architecture. Syva Low and Syva Sub provide a stable podium base for Syva. The plug-and-play AutoConnect provides a rapid and secure audio and physical link.

In fixed installations Syva is particularly suited to sound reinforcement in architectural settings and acoustically challenging environments where a combination of high intelligibility, high SPL and extended bandwidth are required. Its high fidelity sonic signature and elegant lines can satisfy high-end residential projects as well as L-ISA immersive multi-channel systems.

For rental events, Syva is fast to deploy and simple to rig. Its outstanding throw capability can satisfy production needs in large spaces and ballrooms where elegance and discretion are a must.

Syva can be stacked as a standalone system or secured onto one of its LF extensions. Wall-mounting and flying are also possible.

www.liveline.be

How to use this manual

The Syva owner's manual is intended for all actors involved in the system design, implementation, preventive and corrective maintenance of the Syva system. It must be used as follows:

1. Read the technical description for an overview of all system elements, their features, and their compatibilities.
   - Electro-acoustical description (p.12)
   - Rigging system description (p.16)
2. Prepare the system configuration. Consider the mechanical limits and the available acoustical configurations.
   - Mechanical safety (p.23)
   - Loudspeaker configurations (p.25)
3. Before rigging the system, perform mandatory inspections and functional checks.
   - Inspection and preventive maintenance (p.31)
4. To deploy the system, follow the step-by-step rigging instructions and refer to the cabling schemes.
   - Rigging procedures (p.44)
   - Connection to LA amplified controllers (p.53)

The Corrective maintenance (p.57) section contains the operations authorized for the end user.
Performing another operation exposes to hazardous situations.
For advanced maintenance, contact your L-Acoustics representative.

As part of a continuous evolution of techniques and standards, L-Acoustics reserves the right to change the specifications of its products and the content of its document without prior notice. Please check www.l-acoustics.com on a regular basis to download the latest document and software updates.

Contact information

For information on advanced corrective maintenance:
- contact your Certified Provider or your L-Acoustics representative
- for Certified Providers, contact the L-Acoustics customer service: customer.service@l-acoustics.com (EMEA/APAC), laus.service@l-acoustics.com (Americas).

Symbols

The following symbols are used in this document:

This symbol indicates a potential risk of harm to an individual or damage to the product.
It can also notify the user about instructions that must be strictly followed to ensure safe installation or operation of the product.

This symbol notifies the user about instructions that must be strictly followed to ensure proper installation or operation of the product.

This symbol notifies the user about complementary information or optional instructions.

Revision history

version number	publication date	modification
1.0	Sep. 2022	Initial version.

www.liveline.be

System components

Loudspeaker enclosures

Syva	2-way-passive enclosure: 6 x 5'' LF + 3 x 1.75'' HF diaphragm
Syva Low	High power low frequency subwoofer: 2 x 12'' LF
Syva Sub	Infra low frequency subwoofer: 1 x 12'' LF

Powering and driving system

LA2Xi / LA4X / LA7.16i / LA12X	Amplified controller with DSP, preset library and networking capabilities

Refer to the LA2Xi / LA4X / LA7.16i / LA12X owner's manual for operating instructions.

Rack

LA-RAK II AVB	Touring rack containing three LA12X, LA-POWER II for power distribution, LA-PANEL II for audio and network distribution, and two LS10 for AVB distribution

Cables

SP cables	SpeakON loudspeaker cables (4-point, 4 mm² gauge)
	Come in different sizes: SP.7 (0.7 m / 2.3 ft), SP5 (5 m / 16.4 ft), SP10 (10 m / 32.8 ft), and SP25 (25 m / 82 ft)
SP-Y1	Breakout cable for two passive enclosures (2.5 mm² gauge)
	4-point speakON to 2 × 2-point speakON, provided with a CC4FP adapter
DO cables	PA-COM loudspeaker cables (8-point, 4 mm² gauge)
	Come in different sizes: DO.7 (0.7 m / 2.3 ft), DO.10 (10 m / 32.8 ft), and DO.25 (25 m / 82 ft)
DOSUB-LA8	Breakout cable for four passive enclosures (4 mm² gauge)
	8-point PA-COM to 4 × 2-point speakON
DOFILL-LA8	Breakout cable for two 2-way active enclosures (4 mm² gauge)
	8-point PA-COM to 2 × 4-point speakON
DO3WFILL	Breakout cable for one 2-way active enclosure and two passive enclosures (4 mm² gauge)
	8-point PA-COM to 1 × 4-point speakON and 2 × 2-point speakON
custom 2-point speakON cable	2-point speakON cable (2.5 mm² gauge) to bare wire cable
	This cable needs to be custom made.
2 × 2.5 mm² cable	speaker cable with bare wire endings
	Adapt the cable length to the installation.

Information about the connection of the enclosures to the LA amplified controllers is given in this document.

Refer to the LA2Xi / LA4X / LA7.16i / LA12X owner's manual for detailed instructions about the whole cabling scheme, including modulation cables and network.

Rigging elements

Syva Wall	Wall-mount for Syva

www.liveline.be

Syva Base	Baseplate for Syva system
Syva Pole	Pole-mount adapter for Syva
Syva Bar	Rigging bar for Syva
CLAMP250	Clamp certified for 250 kg

Transportation accessories

L-Case	2U Electronics transport and protection case
Syva Cov	Protective cover for Syva enclosure
SyvaLF Cov	Protective cover for Syva Low or Syva Sub enclosure

Software applications

Soundvision	3D acoustical and mechanical modeling software
LA Network Manager	Software for remote control and monitoring of amplified controllers

Refer to the **Soundvision** help.
Refer to the **LA Network Manager** help.

System component illustrations

Cables

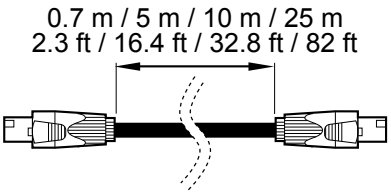

SP cables

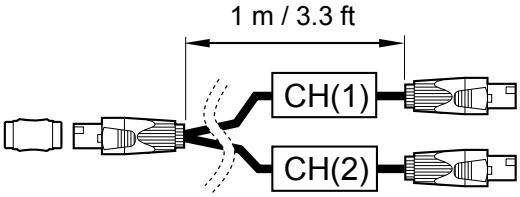

SP-Y1

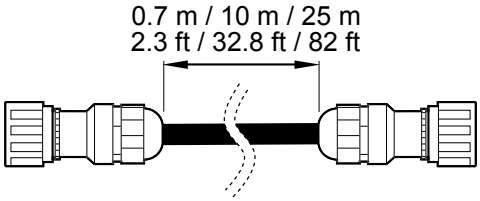

DO cables

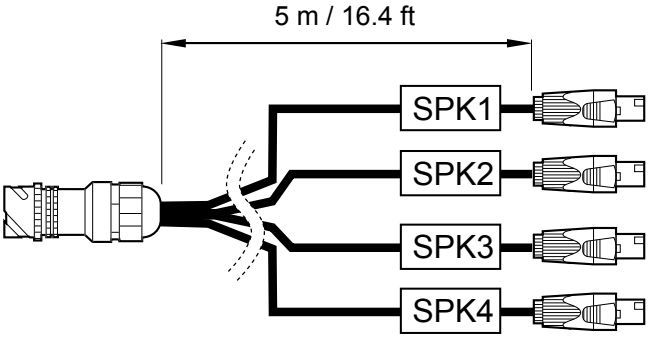

DOSUB-LA8

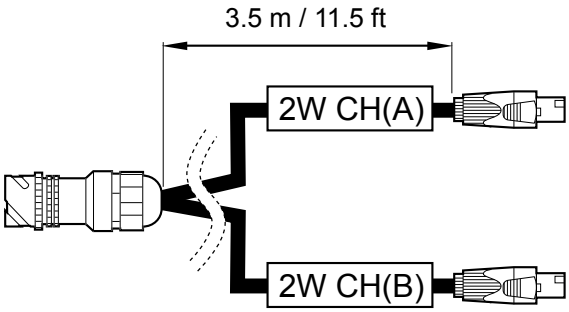

DOFILL-LA8

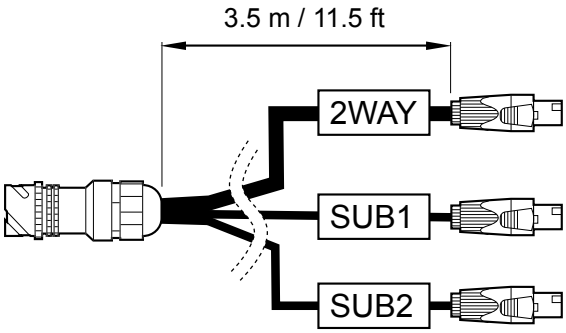

DO3WFILL

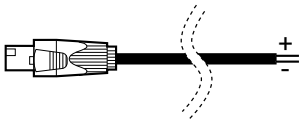

custom 2-point speakON cable

2 × 2.5 mm² cable

Rigging accessories

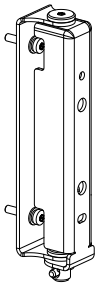

Syva Wall

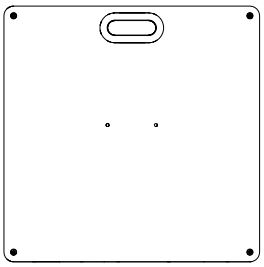

Syva Base

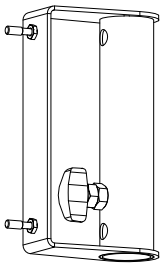

Syva Pole

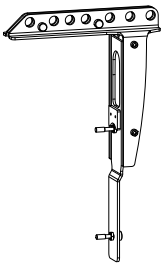

Syva Bar

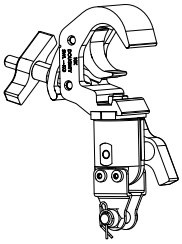

CLAMP250

Transportation

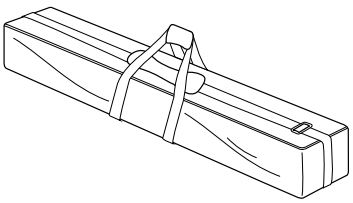

Syva Cov

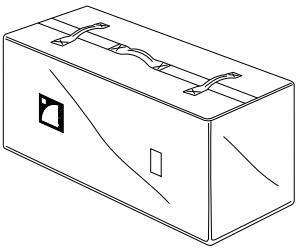

SyvaLF Cov

www.liveline.be

Electro-acoustical description

Directivity

Syva generates a horizontal directivity pattern of 140° and a vertical directivity pattern of +5°/-21° in J-shape (> 10 kHz).

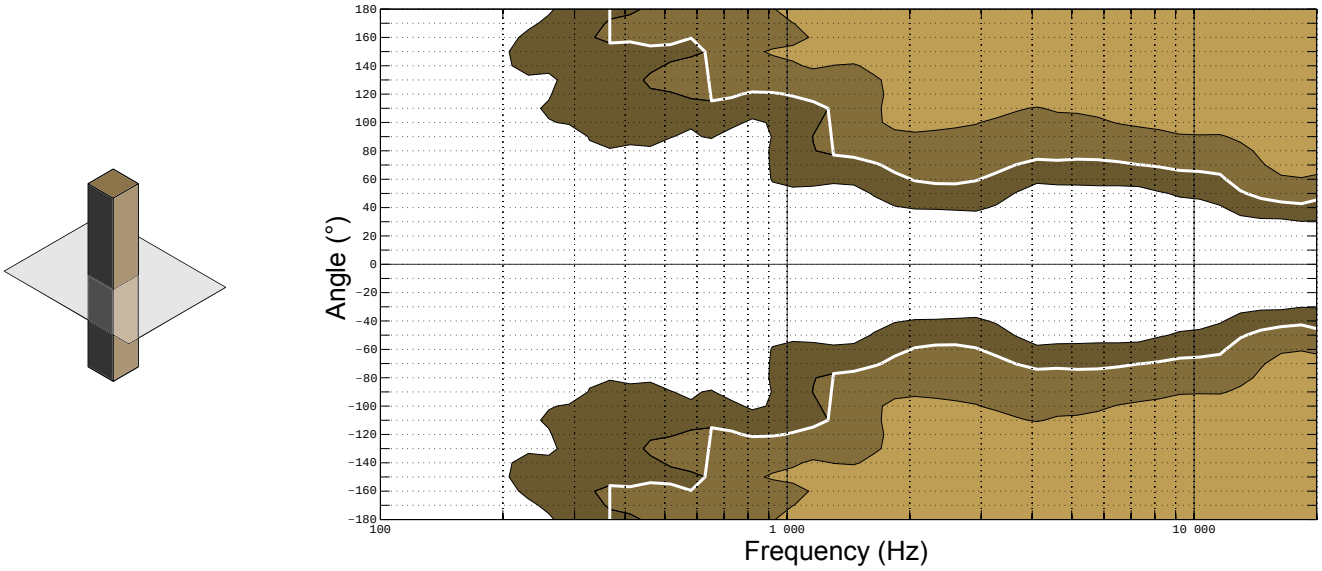

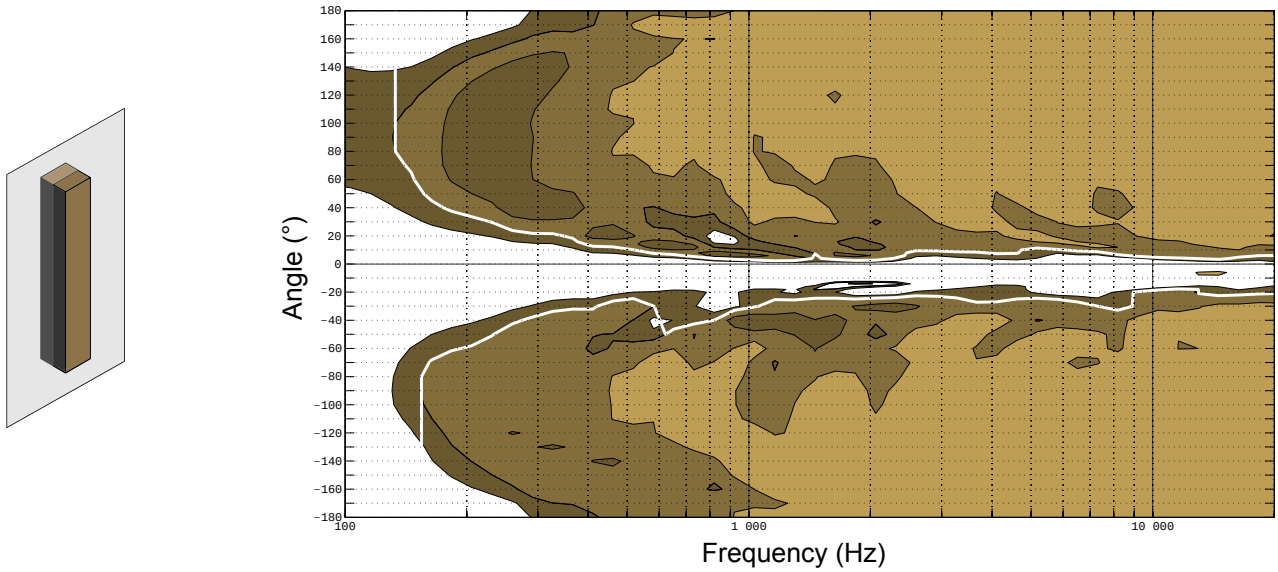

Dispersion angle diagram of a single enclosure, using lines of equal sound pressure at -3 dB, -6 dB, -12 dB.

www.liveline.be

Preset description

[SYVA]

outputs	channels	routing	gain	delay	polarity	mute
OUT 1	PA	IN A	0 dB	0 ms	+	ON
OUT 2	PA	IN A	0 dB	0 ms	+	ON
OUT 3	PA	IN A	0 dB	0 ms	+	ON
OUT 4	PA	IN A	0 dB	0 ms	+	ON

[SYVA LOW SYVA]

loudspeaker elements	outputs	channels	routing	gain	delay	polarity	mute
Syva Low	OUT 1	LF	IN A	0 dB	0 ms	+	ON
Syva	OUT 2	PA					ON
Syva Low	OUT 3	LF	IN B	0 dB	0 ms	+	ON
Syva	OUT 4	PA					ON

[SYVA LOW_100] [SYVA SUB_100]

outputs	channels	routing	gain	delay	polarity	mute
OUT 1	SB	IN A	0 dB	0 ms	+	ON
OUT 2	SB	IN A	0 dB	0 ms	+	ON
OUT 3	SB	IN A	0 dB	0 ms	+	ON
OUT 4	SB	IN A	0 dB	0 ms	+	ON

www.liveline.be

Connectors

Syva

Syva offers multiple types of connectors. Use **one** type of connector at a time.

Use the **speakON connector** to connect the enclosure with an SP cable.

The speakON connector is only accessible if Syva Wall is used with a wedge.
Refer to Wall-mounting Syva (p.44).

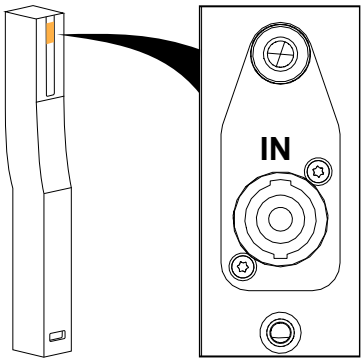

Use the **screw terminal** to connect the enclosure with speaker wire.

Put the gasket and cover back on the connector once the wire is installed.

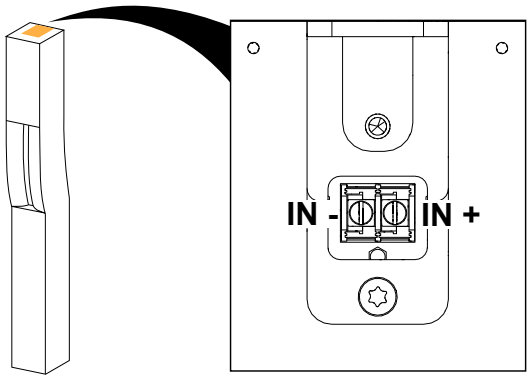

When the screw terminal is not in use, put the gasket and cover back on to avoid leaks.

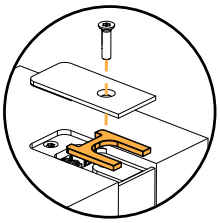

Internal pinout for L-Acoustics 2-way passive enclosures

screw terminal points	IN +	IN -	/	/
speakON points	1 +	1 -	2 +	2 -
transducer connectors	+	-	Not linked	Not linked

Syva Low and Syva Sub

Syva Low and Syva Sub are equipped with one 4-point speakON connector.

Use the labels to differentiate the subwoofers.

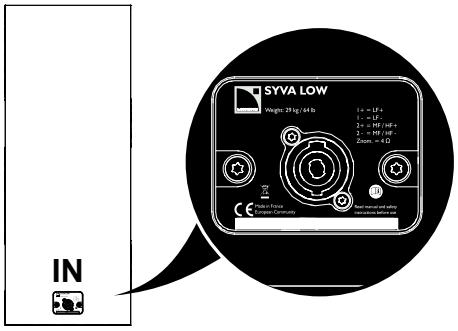

Syva Low

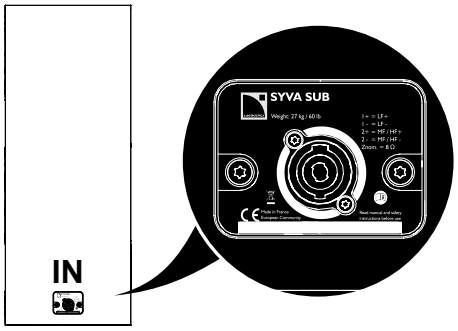

Syva Sub

Syva combined with Syva Low

Amplified controller damage

Do not use the speakON connector or screw terminals on Syva when using AutoConnect.

With Syva on top of Syva Low, AutoConnect is enabled and power is routed through the subwoofer connector plate to the enclosure.

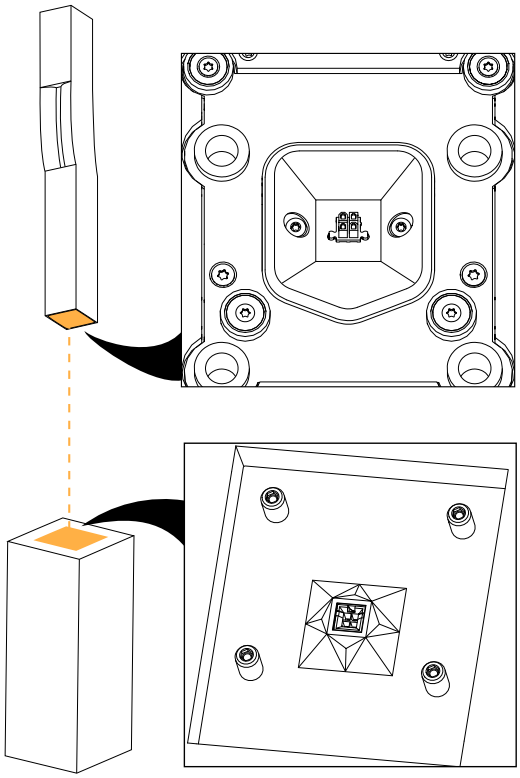

AutoConnect internal pinout

AutoConnect points	1 +	1 -	2 +	2 -
Transducer connectors	LF +	LF -	MF/HF+	MF/HF-

www.liveline.be

Rigging system description

Syva

Syva features two threaded inserts on the rear side to connect dedicated rigging accessories.
At the top, an M8 insert can be fitted with a DIN-580 eye bolt to implement a secondary safety.

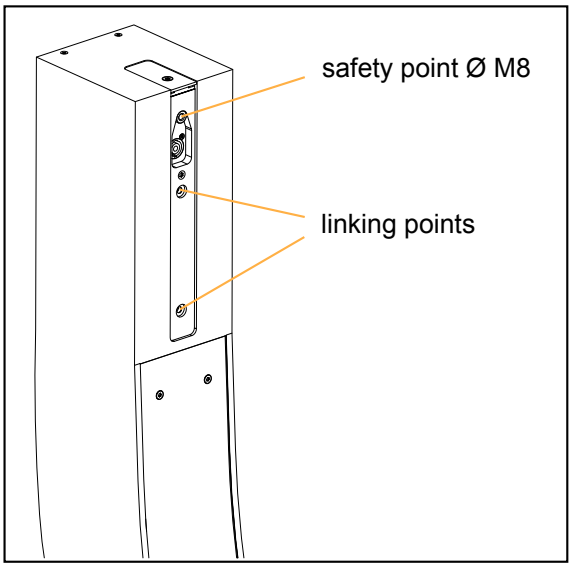

Syva can be stacked on top of Syva Low. Four magnets and lodgings on the bottom of the enclosure ensure stability.

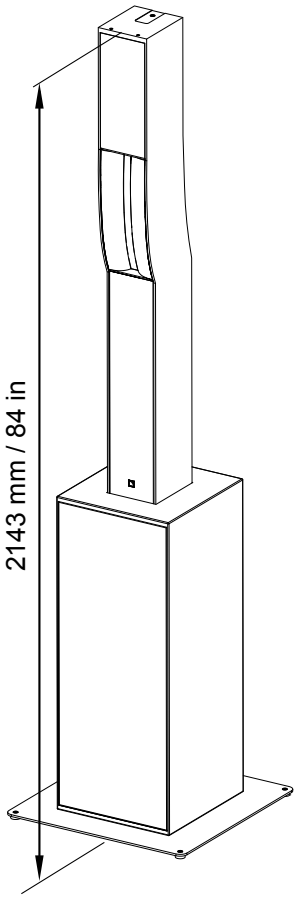

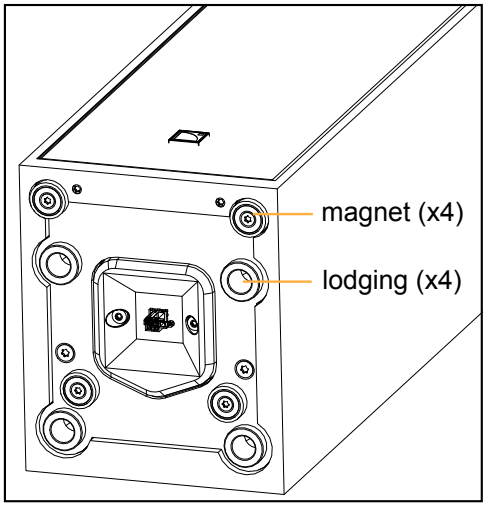

A back plate, a top plate, and a bottom plate conceal and protect the rigging elements and connectors when they are not in use.

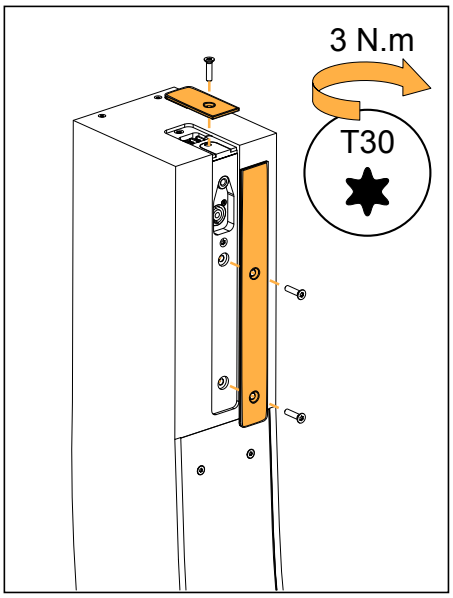

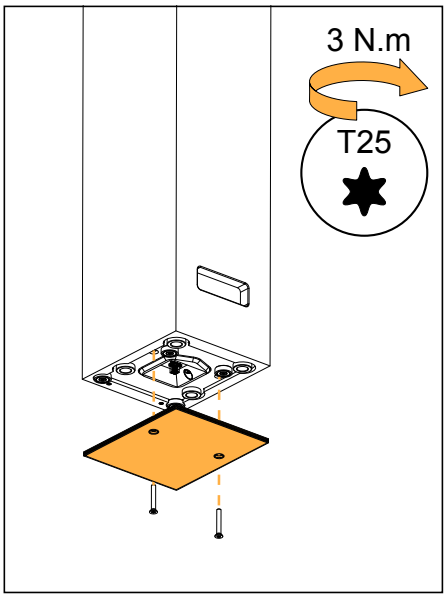

Always put the bottom plate screws back in place to avoid leaks.

Remove the bottom plate to stack Syva on Syva Low or Syva Base.

www.liveline.be

Syva Low and Syva Sub

Two anti-vibration mats are provided to ground-stack the subwoofers.

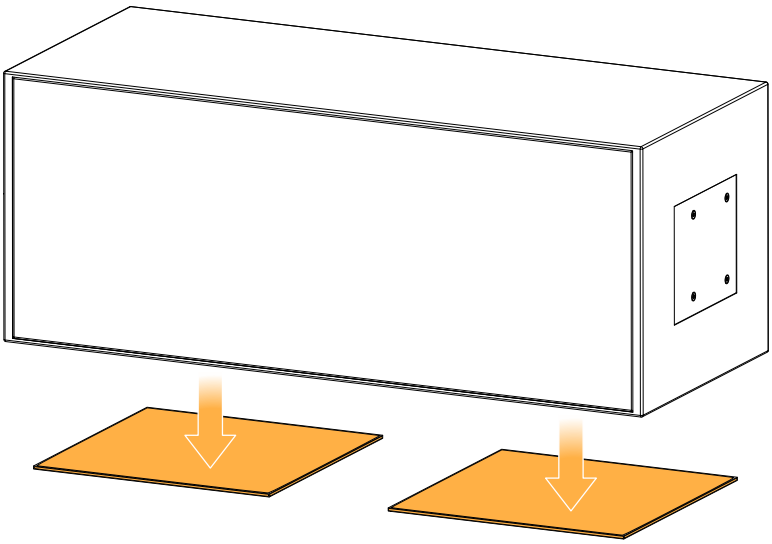

Syva Low features four studs on top to ensure stability when stacking Syva. A top plate conceals them.

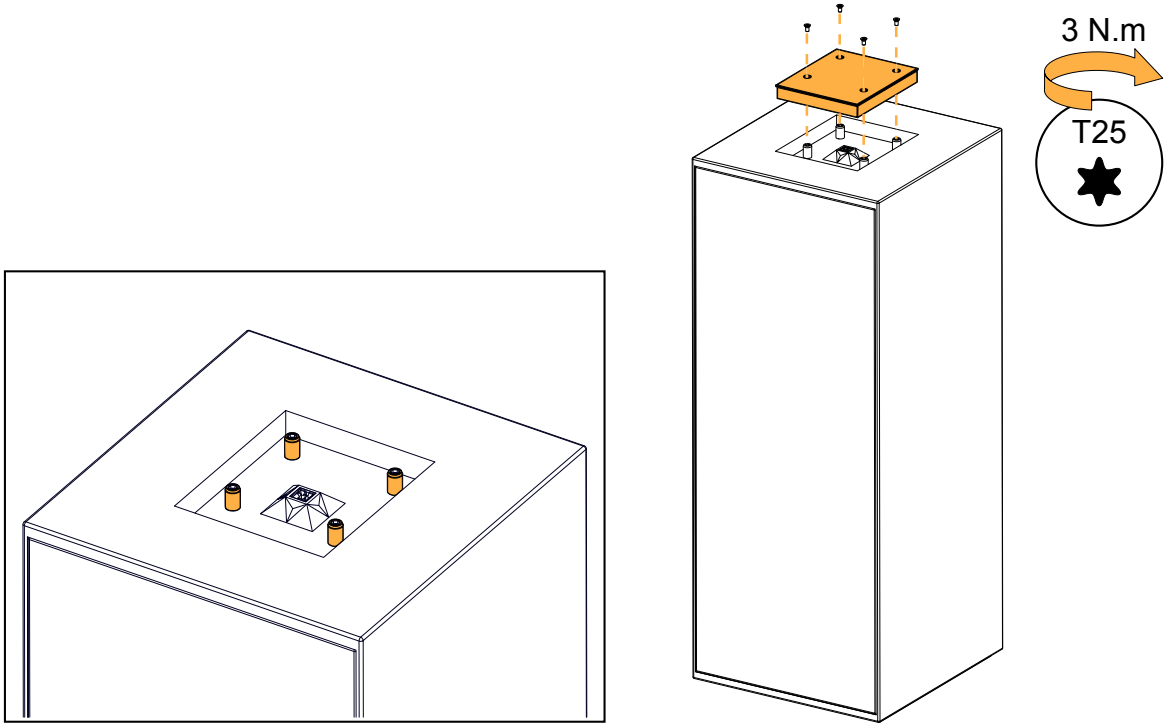

Rigging elements

Syva Wall

Syva on Syva Wall applies a load of **350 N** on the anchoring points.

Syva Wall is a wall-mount for Syva. It consists in two parts, a base and a bracket:

- The base is mounted on a wall or a wedge.
- The bracket is secured to the enclosure.
  It features a toothed wheel to set the azimuth angle up to 90° by steps of 15°.

A safety pin secures the assembly.

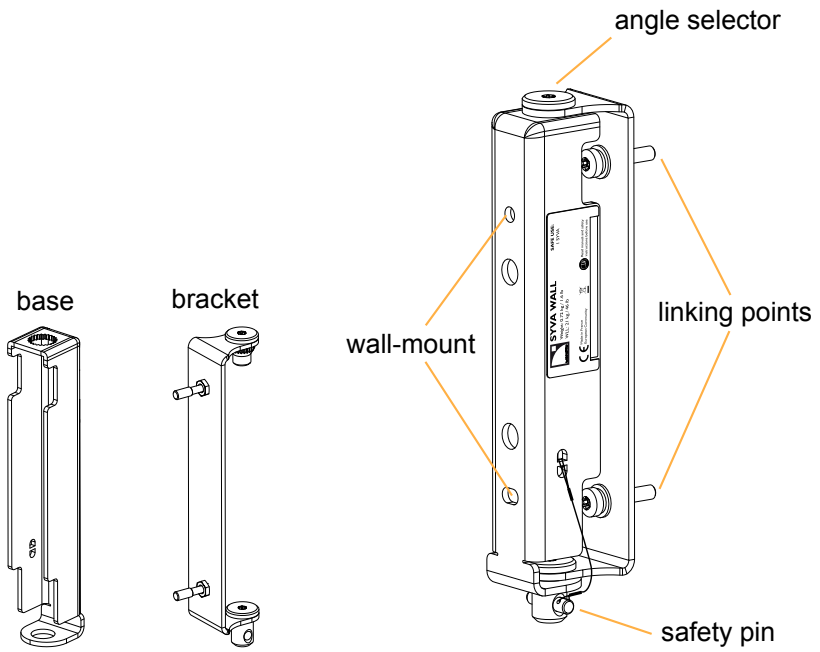

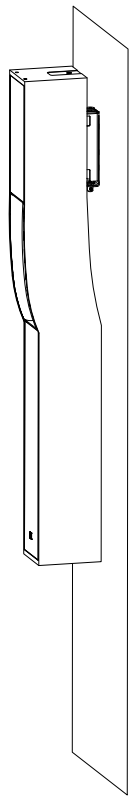

To set an azimuth angle, use a wedge. The wedge depth limits the maximum angle.

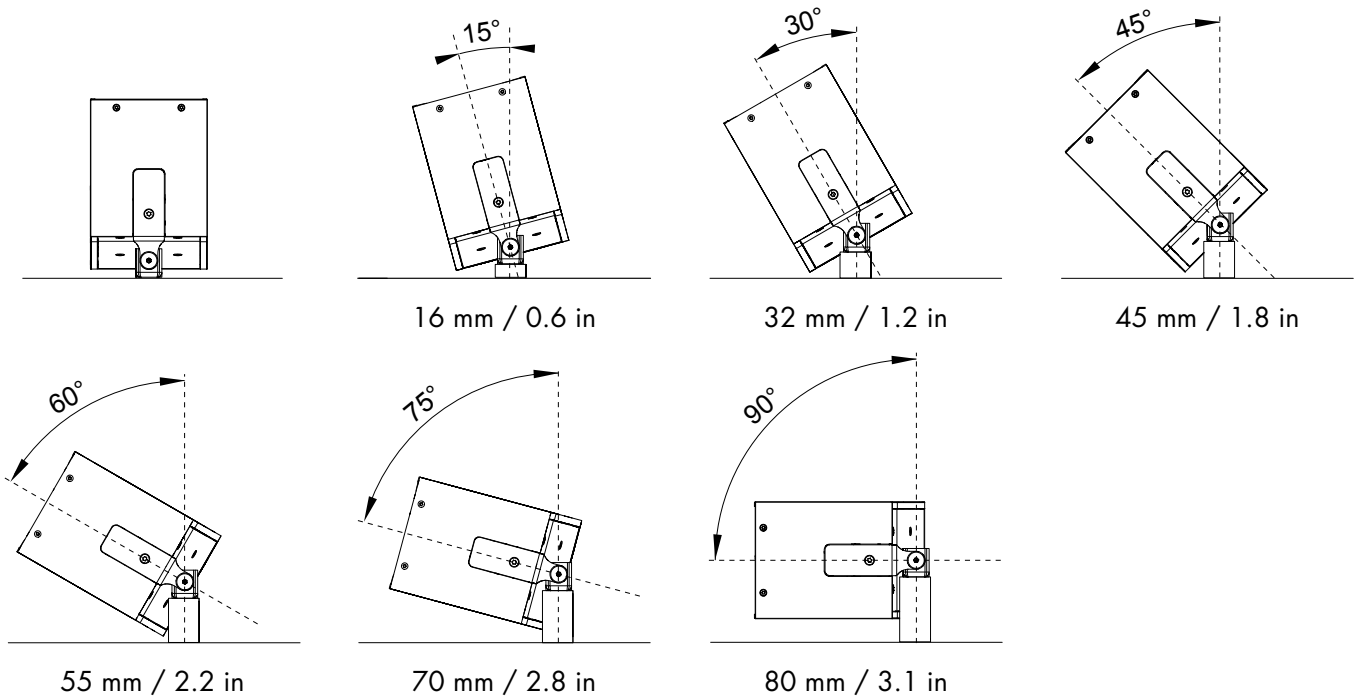

www.liveline.be

Syva Base

Syva Base is a base plate for Syva, Syva Low and Syva Sub. It must be secured to the bottom of the enclosure and features four runners for stability. These can be removed to secure the base plate to the floor.

Risk of crushing injury
Always hold Syva Base by the handle.

Ground-stacking Syva
Do not ground-stack Syva without Syva Base.

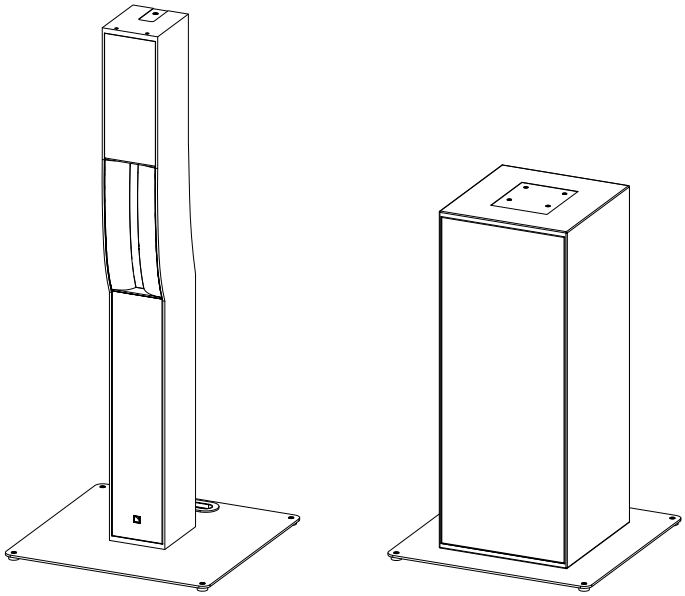

Risk of damage
Do not keep Syva Base secured to the enclosure during transport.

Syva Pole

Syva Pole is a 35 mm / 1-3/8" pole mount adapter for Syva.

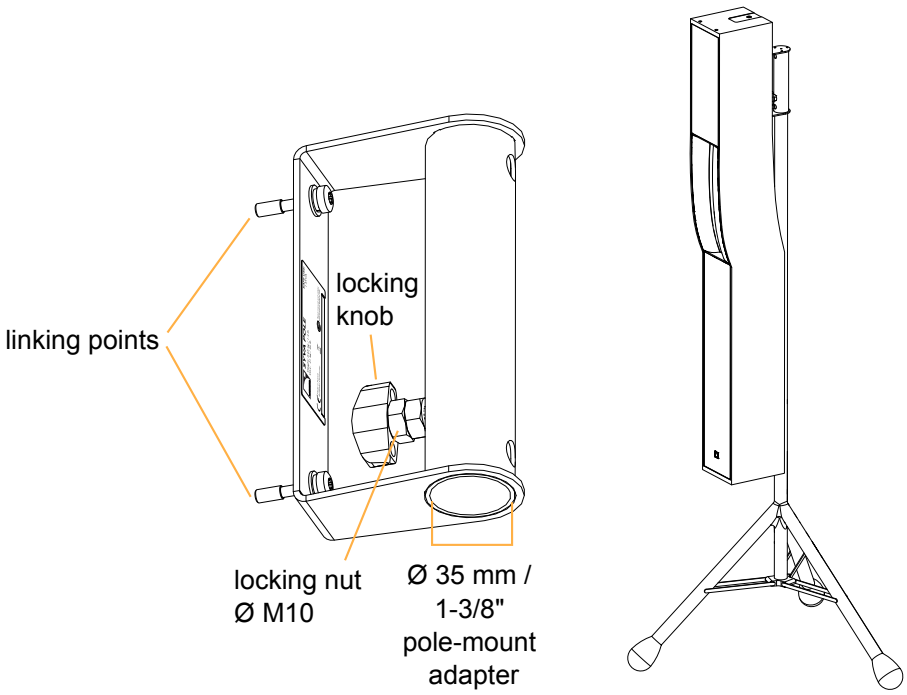

Syva Bar

Syva Bar is a lifting bar for Syva.

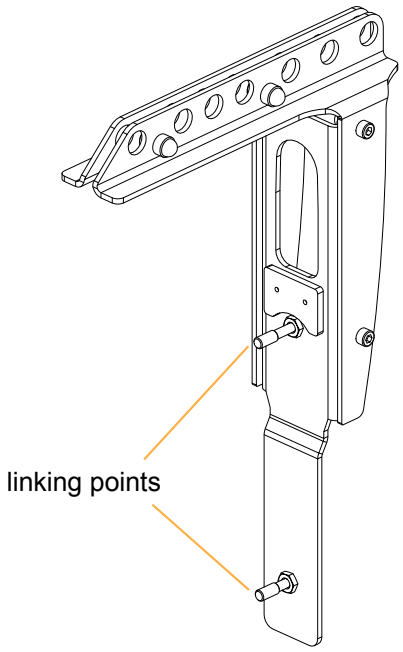

Seven pickup points provide site angle settings between -10° and +5°.

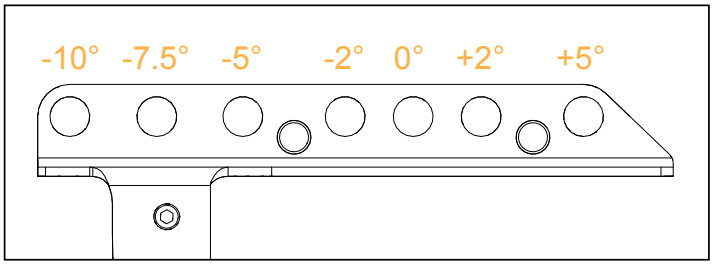

Syva Bar and Syva can be flown with the provided Ø12 mm shackle WLL 1 t or secured to a structure with CLAMP250.

www.liveline.be

Syva Cov and SyvaLF Cov

Syva Cov is the reference cover for Syva. The front face (with the logo) is reinforced to protect the fins and the grill. The rear side features a pouch to store the enclosure protection plates.

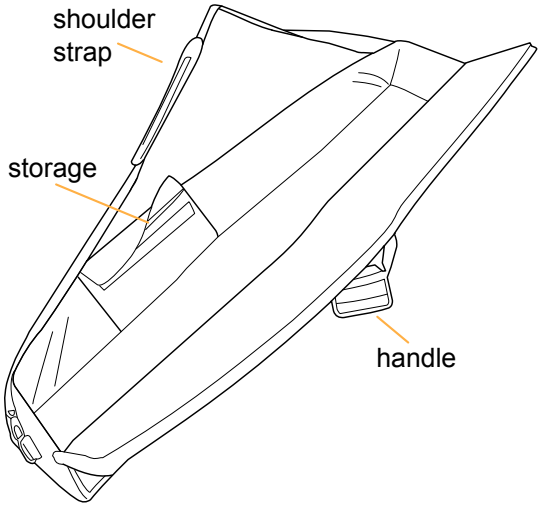

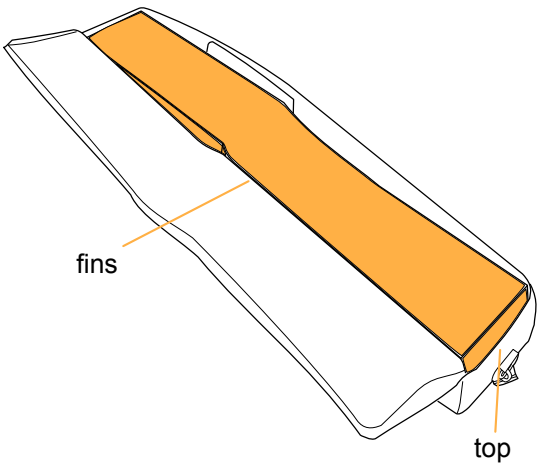

SyvaLF Cov is the reference cover for Syva Low and Syva Sub. The front face (with the logo) is reinforced to protect the grill. A flap covers the connector at the rear and allows to check the label.

Refer to Storing Syva Low / Syva Sub in SyvaLF Cov (p.52).

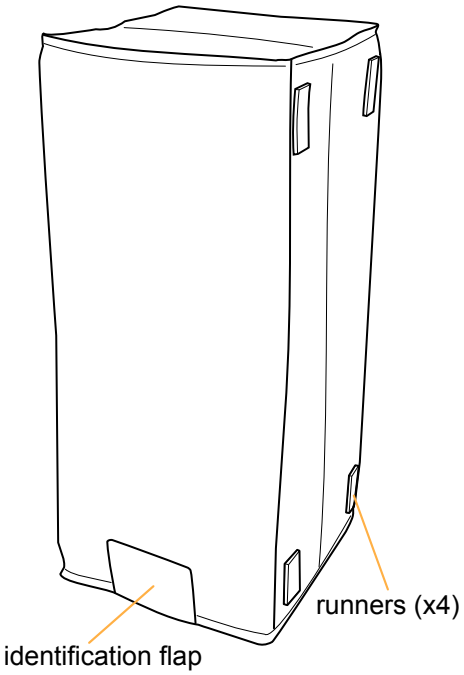

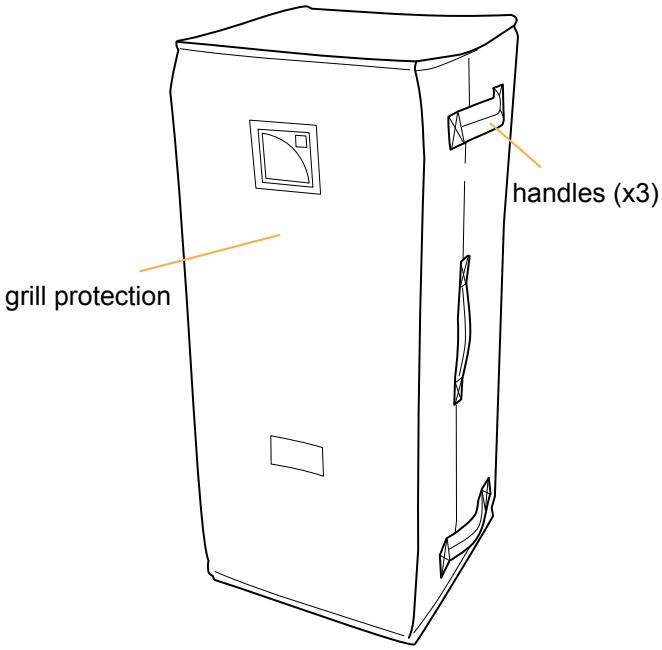

www.liveline.be

Mechanical safety

Flown configurations

The Syva rigging system complies with 2006/42/EC: Machinery Directive. It has been designed following the guidelines of BGV-C1.

2006/42/EC: Machinery Directive specifies a safety factor of 4 against the rupture. The flown deployments described in this manual achieve a safety factor of **5 or more**.

Refer to Soundvision for the safety factor of a specific deployment.

The **safe limit** gives the maximum number of elements for which the safety factor is compliant with the 2006/42/EC: Machinery Directive, within the use defined in this manual and regardless of the other deployment parameters (site angles, inter-element angles, etc.).

The **maximum limit** gives the maximum number of elements for which the safety factor can be compliant with the 2006/42/EC: Machinery Directive, when the other deployment parameters provide the best mechanical conditions.

For mixed arrays refer to your Soundvision model.

Syva

configuration	rigging accessory	maximum / safe limit
Flown	Syva Bar	1
Wall-mounted	Syva Wall	1

Other configurations

For other configurations, respect the recommended maximum limit for optimal stability.

Syva

configuration	rigging accessory	maximum / safe limit
Ground-stacked	Syva Base	1
Pole-mounted	Syva Pole	1

Syva Low / Syva Sub

configuration	rigging accessory	maximum / safe limit
Ground-stacked	Syva Base	1
Ground-stacked	No rigging accessory	1

Syva on Syva Low

configuration	rigging accessory	maximum / safe limit
Ground-stacked	Syva Base	1

www.liveline.be

Assessing mechanical safety

Mechanical safety of the rigging system

Before any installation, always model the system in Soundvision and check the **Mechanical Data** section for any stress warning or stability warning.

In order to assess the actual safety of any array configuration before implementation, refer to the following warnings:

Rated working load limit (WLL) is not enough

The rated WLL is an indication of the element resistance to tensile stress. For complex mechanical systems such as loudspeaker arrays, WLLs cannot be used per se to determine the maximum number of enclosures within an array or to assess the safety of a specific array configuration.

Mechanical modeling with Soundvision

The working load applied to each linking point, along with the corresponding safety factor, will depend on numerous variables linked to the composition of the array (type and number of enclosures, splay angles) and the implementation of the flying or stacking structure (number and location of flying points, site angle). This cannot be determined without the complex mechanical modeling and calculation offered by Soundvision.

Assessing the safety with Soundvision

The overall safety factor of a specific mechanical configuration always corresponds to the lowest safety factor among all the linking points. Always model the system configuration with the Soundvision software and check the **Mechanical Data** section to identify the weakest link and its corresponding working load. By default, a stress warning will appear when the mechanical safety goes beyond the recommended safety level.

Safety of ground-stacked arrays in Soundvision

For ground-stacked arrays, a distinct stability warning is implemented in Soundvision. It indicates a tipping hazard when the array is not secured to the ground, stage or platform. It is the user's responsibility to secure the array and to ignore the warning.

Additional safety for flown arrays

When flying an array, use available holes to implement a secondary safety.

Considerations must be given to unusual conditions

Soundvision calculations are based on usual environmental conditions. A higher safety factor is recommended with factors such as extreme high or low temperatures, strong wind, prolonged exposition to salt water, etc. Always consult a rigging specialist to adopt safety practices adapted to such a situation.

www.liveline.be

Loudspeaker configurations

Syva colinear source

In this configuration the system operates over the nominal bandwidth of the enclosure.

The [SYVA] preset delivers a reference frequency response in medium throw applications.

Syva is driven by the LA2Xi / LA4X / LA7.16i / LA12X amplified controllers.

Reduced maximum SPL or drive capacity with LA2Xi: refer to the **LA2Xi owner's manual**.

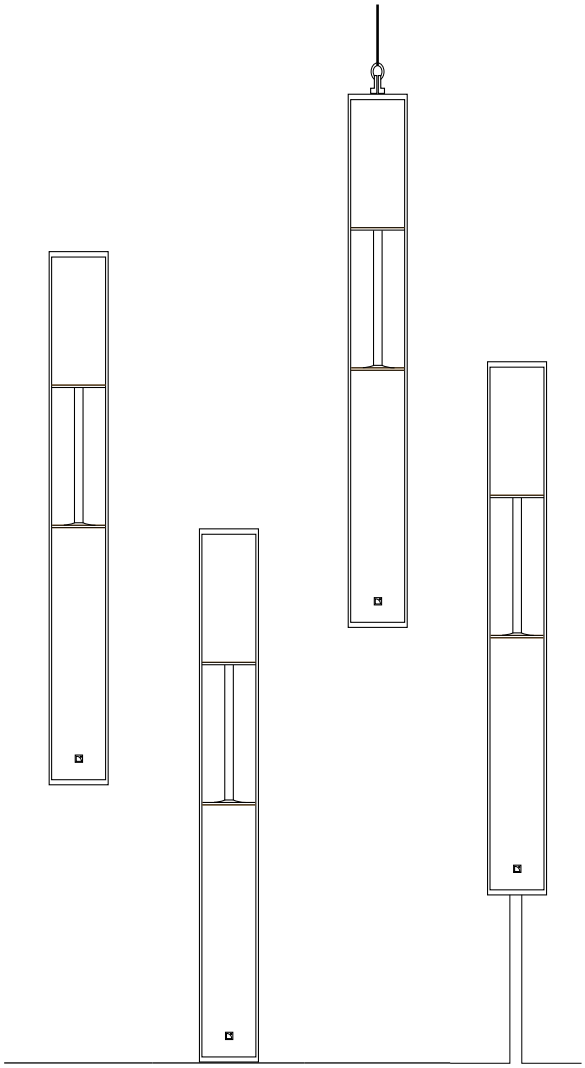

Preset	[SYVA]
Frequency range (-10 dB)	87 Hz - 20 kHz

www.liveline.be

Syva colinear source with LF extension

In hybrid configuration with Syva Low, the Syva system bandwidth is extended down to 42 Hz and the system contour is reinforced by 9 dB.

Syva and Syva Low are driven by the LA2Xi / LA4X / LA7.16i / LA12X amplified controllers.

Reduced maximum SPL or drive capacity with LA2Xi: refer to the **LA2Xi owner's manual**.

Coupled

The [SYVA LOW SYVA] hybrid preset enables acoustic coupling when Syva is on top of Syva Low (AutoConnect) or within a 60 cm (24 in) distance.

To use [SYVA LOW SYVA], connect Syva and Syva Low to the same amplified controller output. Use Autoconnect or an SP-Y1 cable. Refer to Connection to LA amplified controllers (p.53).

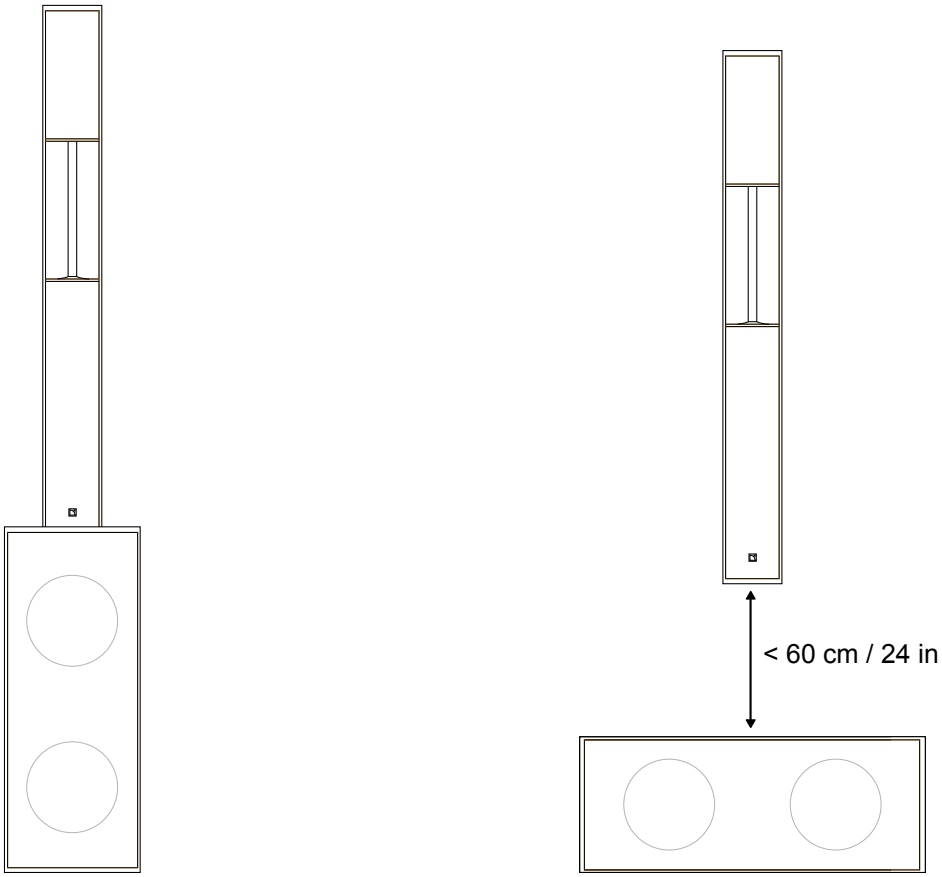

with AutoConnect

without AutoConnect

Enclosures	Syva	Syva Low
Preset	[SYVA LOW SYVA]	
Frequency range (-10 dB)	42 Hz - 20 kHz	

No pre-alignment delay values are required for the Syva system.

Separated

The [SYVA] preset delivers a reference frequency response in medium throw applications.

The [SYVA LOW_100] preset provides Syva Low with an upper frequency limit at 100 Hz.

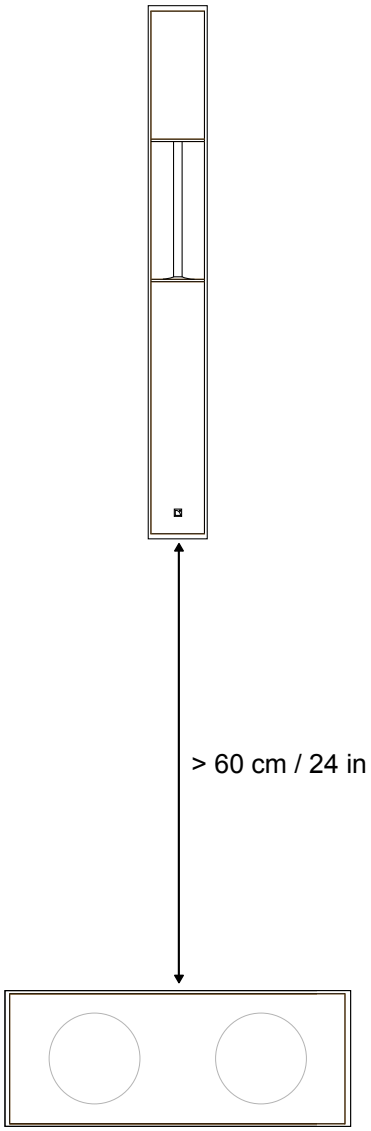

Enclosures	Syva	Syva Low
Preset	[SYVA]	[SYVA LOW_100]
Frequency range (-10 dB)	40 Hz - 20 kHz	

Do not forget to add the geometric delays depending on the configuration.

No pre-alignment delay values are required for the Syva system.

www.liveline.be

Syva colinear source with LF extension and subwoofer

With Syva Sub, the Syva system bandwidth is extended down to 27 Hz.

Syva, Syva Low and Syva Sub are driven by the LA2Xi / LA4X / LA7.16i / LA12X amplified controllers.

Reduced maximum SPL or drive capacity with LA2Xi: refer to the **LA2Xi owner's manual**.

Coupled

The [SYVA LOW SYVA] hybrid preset enables acoustic coupling when Syva is on top of Syva Low (AutoConnect) or within a 60 cm (24 in) distance.

To use [SYVA LOW SYVA], connect Syva and Syva Low to the same amplified controller output.
Use Autoconnect or an SP-Y1 cable. Refer to Connection to LA amplified controllers (p.53).

The [SYVA SUB_100] preset provides Syva Sub with an upper frequency limit at 100 Hz.

[SYVA SUB_100] polarity is reversed to optimize Syva Sub acoustic summation with Syva/Syva Low.

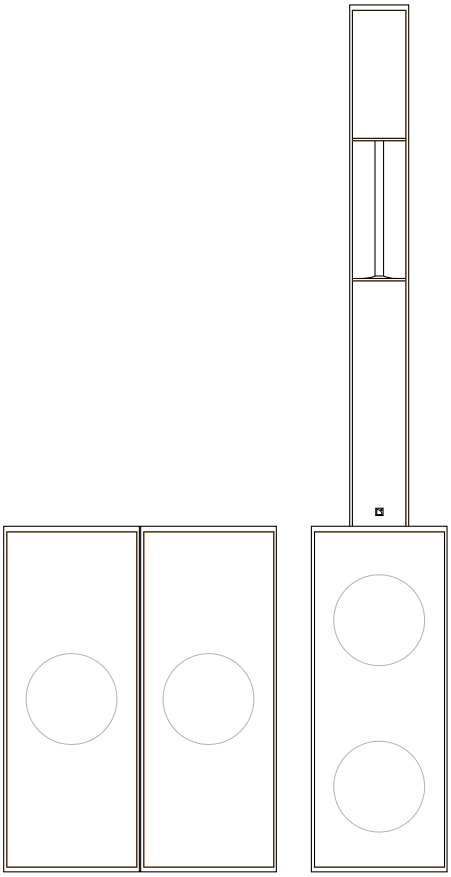

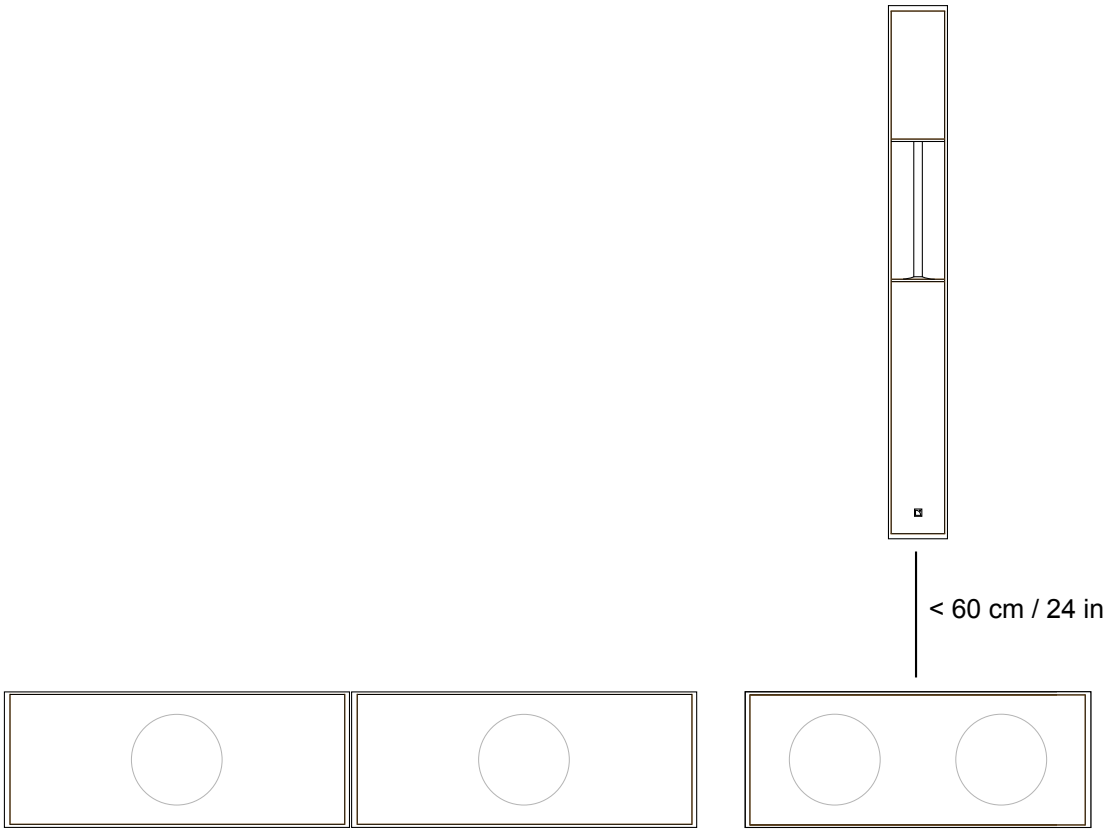

Enclosures	Syva	Syva Low	Syva Sub
Presets	[SYVA LOW SYVA]		[SYVA SUB_100]
Frequency range (-10 dB)	27 Hz - 20 kHz		

Grouping subwoofers

Place the subwoofer enclosures side by side. If not possible, the maximum distance between two adjacent acoustic centers must be 1.7 m if the upper frequency limit of the subwoofer system is at 100 Hz.

Do not forget to add the geometric delays depending on the configuration.

No pre-alignment delay values are required for the Syva system.

www.liveline.be

Separated

The [SYVA] preset delivers a reference frequency response in medium throw applications.

The [SYVA LOW_100] and [SYVA SUB_100] presets provide Syva Low and Syva Sub with an upper frequency limit at 100 Hz.

[SYVA SUB_100] polarity is reversed to optimize Syva Sub acoustic summation with Syva/Syva Low.

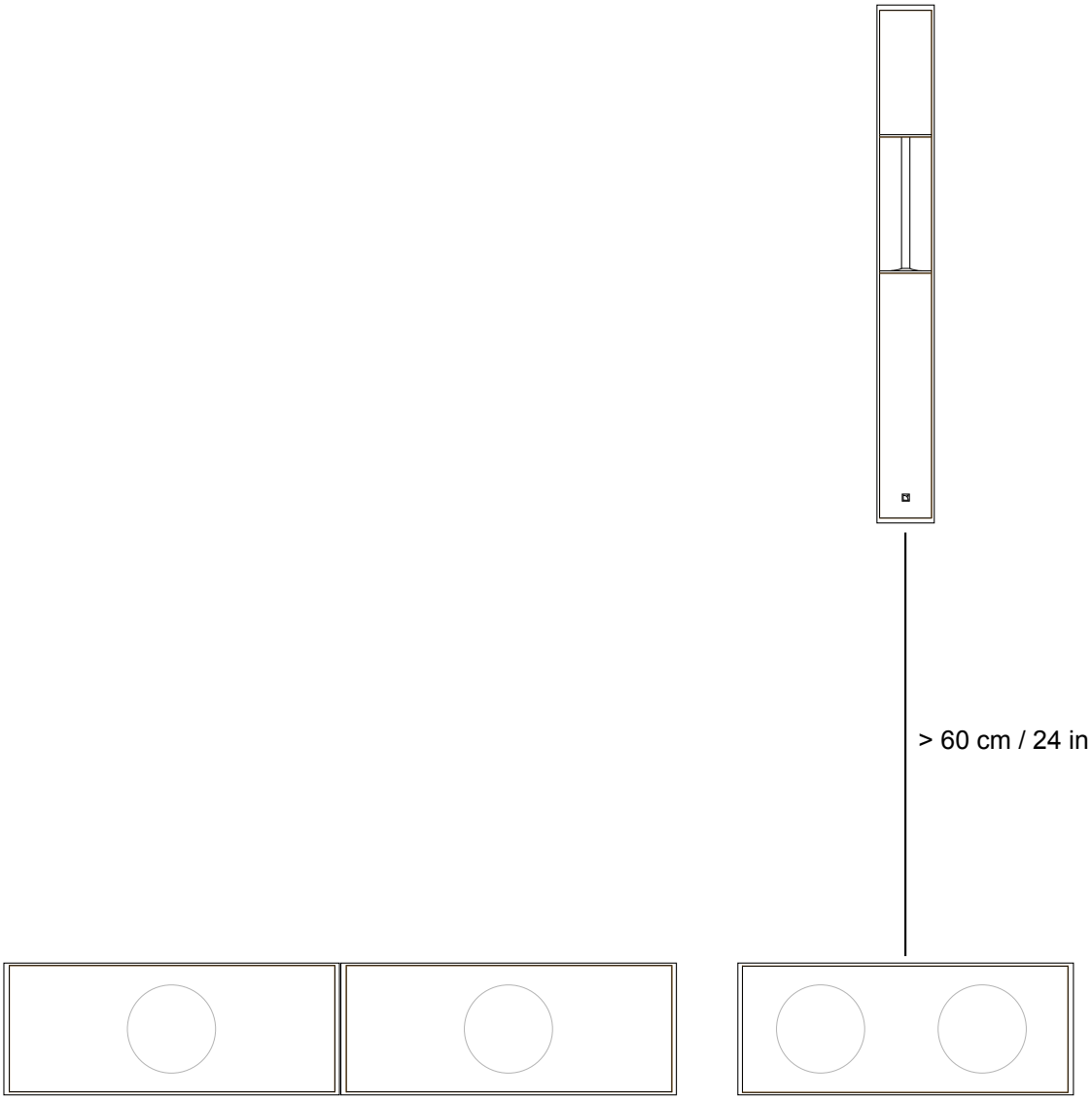

Enclosures	Syva	Syva Low	Syva Sub
Presets	[SYVA]	[SYVA LOW_100]	[SYVA SUB_100]
Frequency range (-10 dB)	27 Hz - 20 kHz		

Grouping subwoofers

Place the subwoofer enclosures side by side. If not possible, the maximum distance between two adjacent acoustic centers must be 1.7 m if the upper frequency limit of the subwoofer system is at 100 Hz.

Do not forget to add the geometric delays depending on the configuration.

No pre-alignment delay values are required for the Syva system.

www.liveline.be

Inspection and preventive maintenance

How to do preventive maintenance

Inspect the system before any deployment and after any corrective maintenance operation.

Perform preventive maintenance at least once a year.

Rigging and hardware

Perform the Rigging part inspection (p.32) on each rigging part.

Use the Mechanical system overview (p.33) to identify critical parts of the system and apply the specific checks described in the Inspection references (p.38).

Do the Rigging check (p.39).

If any parts are damaged, contact your L-Acoustics representative for further instructions.

Acoustics

Perform the Enclosure check (p.40).

Perform the Listening test (p.42) to detect any degradation in sound quality.

If necessary, refer to the Corrective maintenance (p.57) section for speaker repair kits and maintenance instructions.

www.liveline.be

Rigging part inspection

About this task

For critical rigging parts, use the Inspection references (p.38) for comparison and specific manipulations.

The term "rigging part" comprises:

- lifting accessories such as clamps and shackles
- rigging accessories such as rigging frames, rigging interfaces, and brackets
- fasteners used for assembling two products together such as ball-locking pins, rigging axes, and safety pins
- rigging elements integrated in the product such as rigging arms and rails
- transportation accessories

This inspection procedure covers only L-Acoustics products. To inspect other products that are part of the lifting chain, refer to the manufacturer's instructions.

Prerequisite

Perform the inspection in a well-lit environment.

Procedure

1. Check that the rigging part is present.
2. If applicable, disassemble the rigging part from the enclosure or the rigging accessory.

   Check that the tethers are intact and safely secured.
3. Inspect the part from every side.

   Compare with the **reference pictures**.

   Check for:
   - corrosion
   - wear and cracks
   - bends and dents
   - holes
   - missing safety cues
   - missing identification labels
   - missing or loose fasteners

   Replacing screws
   If a screw is loose, remove and replace it.
   Always use the new screws provided in the repair kit.
   If no new screw is available, add blue threadlocker before reusing the screw.
   Do not apply more than the indicated torque.
4. Check the **geometry** of the part to identify critical deformations.

   Place the rigging part on a flat surface or hold a level against it.
5. Check the **moving parts**.

   Make sure that the mechanism engages correctly.

What to do next

If a problem is detected, perform the authorized maintenance operations or contact your L-Acoustics representative.

www.liveline.be

Mechanical system overview

Critical parts of the lifting chains are highlighted.

The indicates a visual inspection. The indicates a functional check.

Perform the Rigging part inspection (p.32) on critical parts.
For each part, refer to the Inspection references (p.38).

Replacing screws
If a screw is loose, remove and replace it.
Always use the new screws provided in the repair kit.
If no new screw is available, add blue threadlocker before reusing the screw.
Do not apply more than the indicated torque.

www.liveline.be

Wall-mounted with Syva Wall

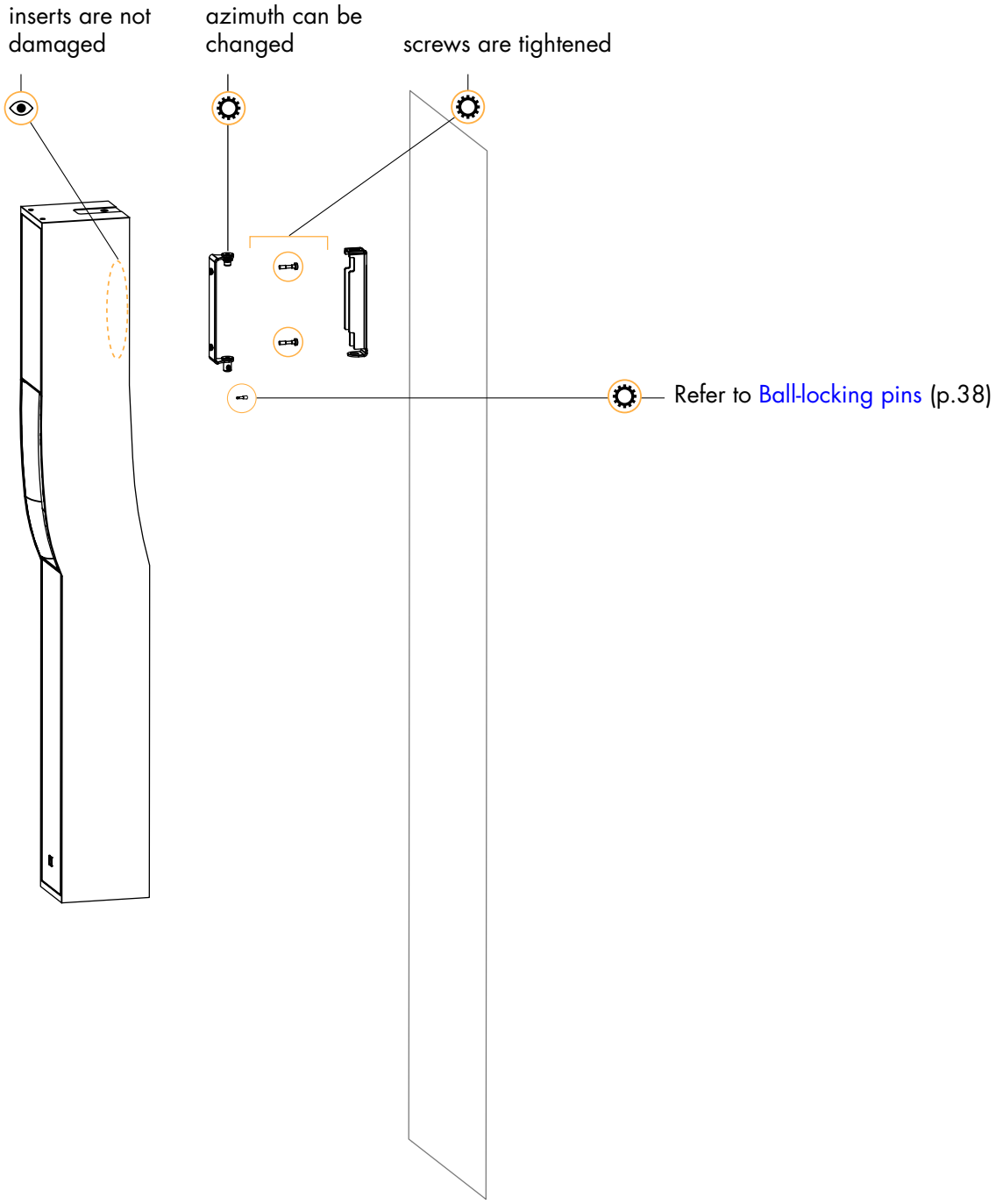

Flown with Syva Bar and CLAMP250

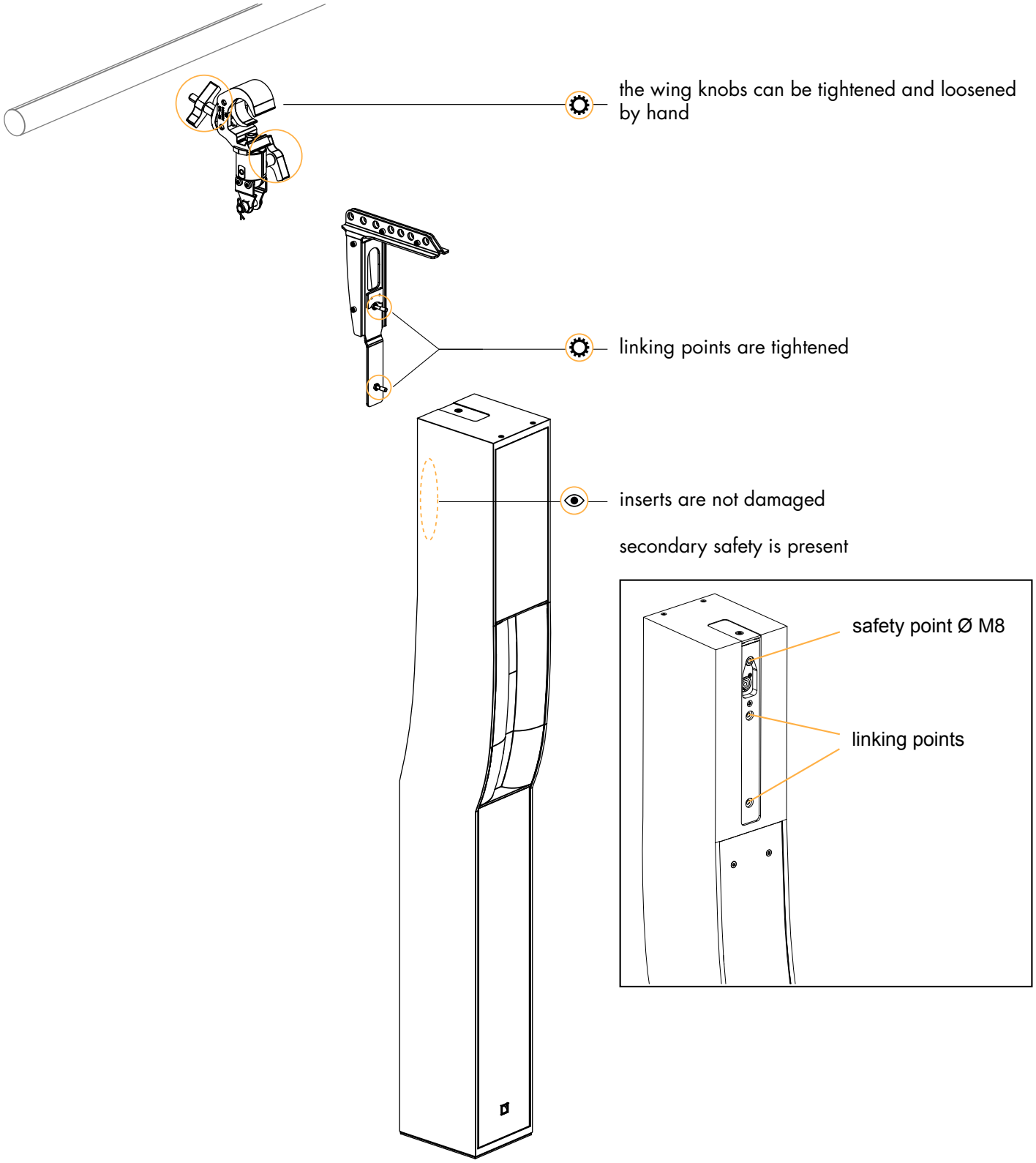

www.liveline.be

Pole-mounted with Syva Pole

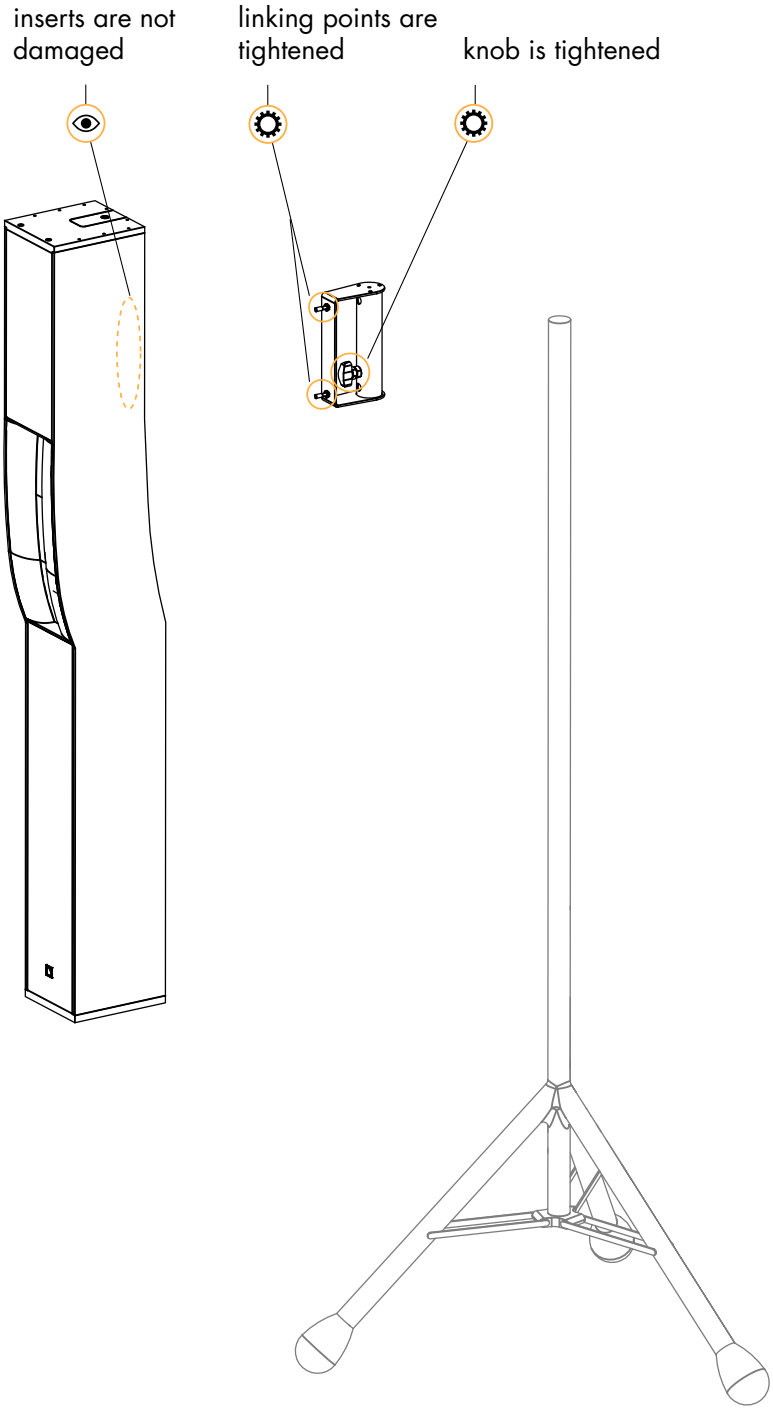

Stacked on Syva Low with Syva Base

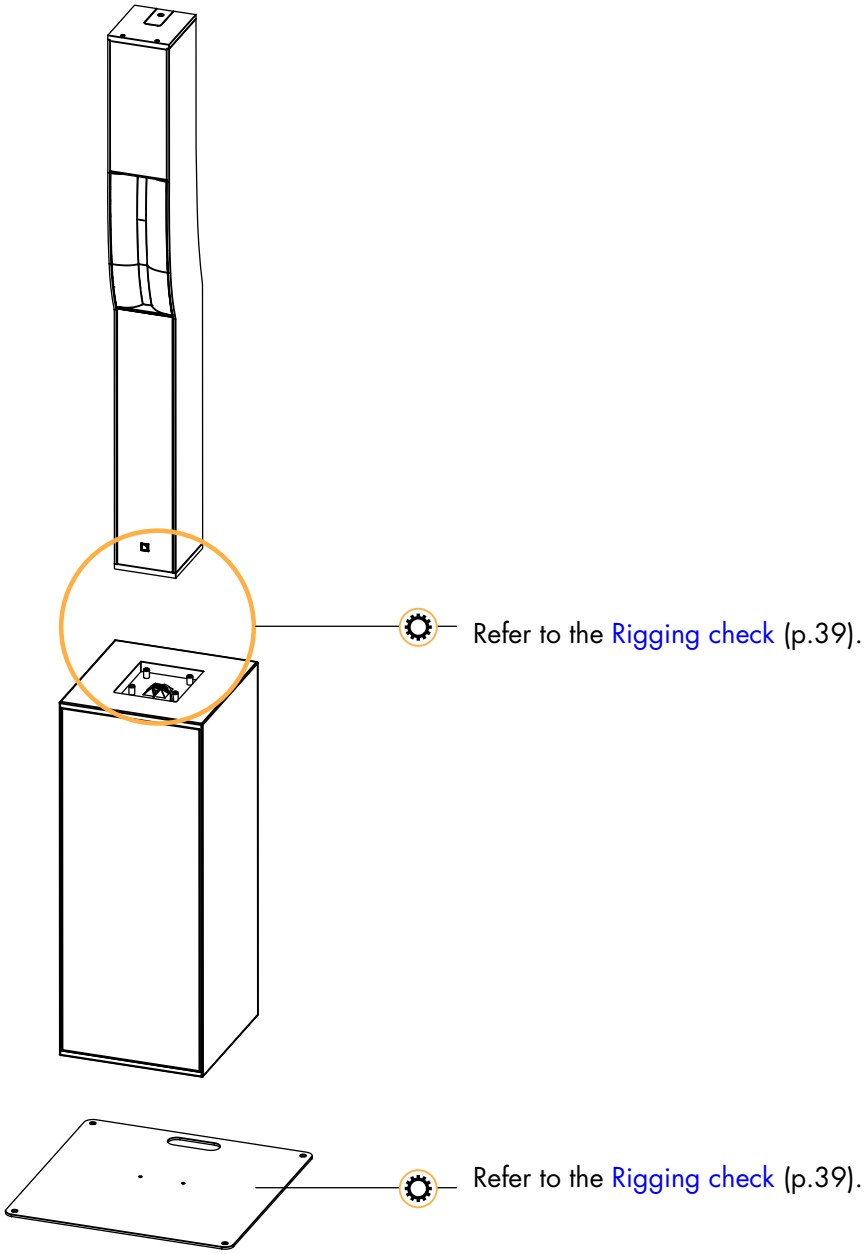

www.liveline.be

Inspection references

Ball-locking pins

Reference pictures

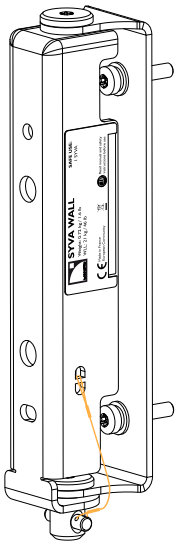

tether (Syva Wall)

Moving parts

1. Press the push button. The ball-locking mechanism is retracted.
2. Release the button. The ball-locking mechanism is activated.

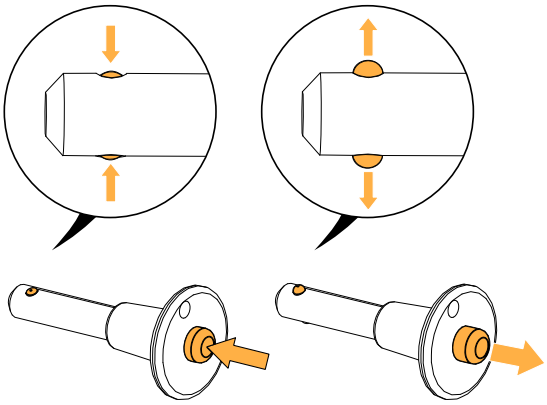

3. Insert the pin in its storage and rigging locations.
   If the pin is inserted in two plates, the ball must pass between both plates and lock the pin in place.

   If the check fails, **immediately withdraw the product from use and contact L-Acoustics**.

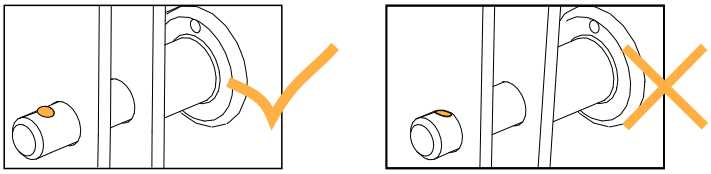

Related tasks

Rigging part inspection (p.32)

Rigging check

Active check of the stacking mechanism of Syva. Refer to the Rigging procedures (p.44) for further rigging instructions, screwdriver bits, and Torque.

Procedure

1. Remove the protection plate and inspect the mechanical interface.

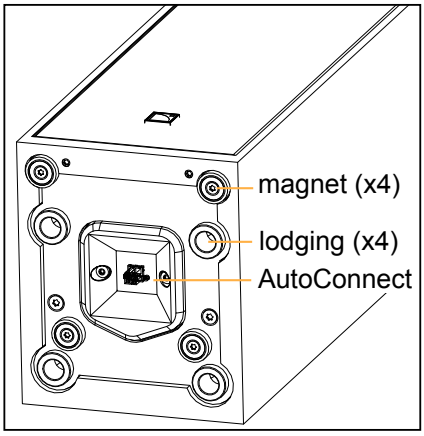

   - The lodgings are not worn out.
   - The four magnets are present.
   - The AutoConnect connector is not damaged.
   - The mechanical interface is tightly secured to the cabinet.
2. Stack Syva on top of Syva Low and Syva Base.

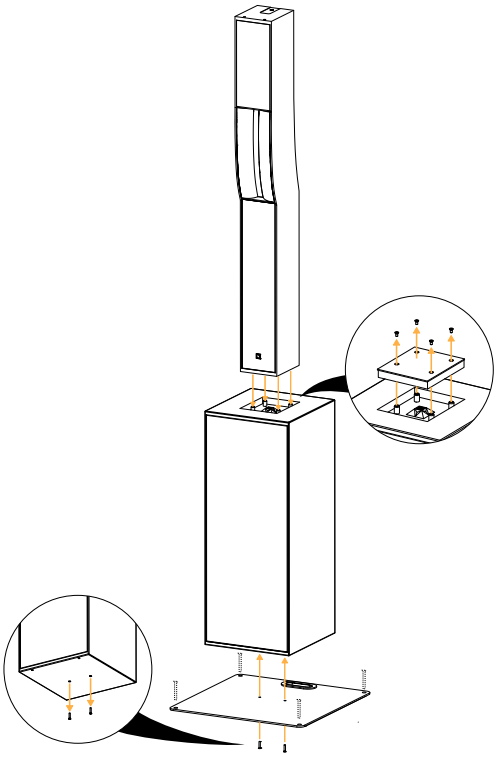

   - The lodgings meet the studs.
3. Gently push Syva from side to side.
   - The assembly remains stable.

www.liveline.be

Acoustical check

Enclosure check

This feature is available on:
LA4X
LA12X

ENCLOSURE CHECK measures impedance at the reference frequencies for the connected loudspeaker family. The measured impedance is compared to the expected range allowing for fast detection of loudspeakers presenting circuit continuity issues.

The results can be used for preliminary diagnosis but cannot replace a comprehensive quality control.

Prerequisite

ENCLOSURE CHECK measurements can only be reliable if the following requirements are met:

Environment and temperature:
- Ambient temperature must be comprised between 0 °C / 32 °F and 40 °C / 104 °F. Ideal temperature is 20 °C / 68 °F.
- Enclosures must be at room temperature. If warm from a recent high level use or recently moved from a cold environment, let the loudspeakers reach room temperature before starting.

Enclosures:
- Enclosures must be included in the embedded factory preset library.
- Enclosures must be in nominal operating conditions:
  - Remove covers or dollies obstructing the loudspeakers or the vents.
  - Check for obvious physical damage or air leak: visually inspect the grill, gasket, cabinet, and connector plate for loose, missing or damaged parts.

Connection:
- Use only 10 m / 30 ft 4 mm² / AWG 11 speaker cables.
- Do not connect enclosures in parallel.

Amplified controllers:
- LA4X must run at least firmware version 1.1.0.
- LA4X load sensors must be calibrated. Refer to the **Load Sensor Calibration Tool** technical bulletin for more information.
- LA4X must warm up for at least 10 minutes after power up. Do not power off, reboot or switch to standby mode to avoid resetting the countdown.
- Load a preset corresponding to the connected loudspeaker's family. Presets from the user memories may be used on condition they are made of presets supported in the embedded factory preset library.

Procedure

1. Power up the amplified controller. Let LA4X warm up for at least 10 minutes.
2. Connect the loudspeaker enclosures to the amplified controller.
3. Load a preset from or built from the embedded library corresponding to the connected loudspeaker family.
4. On the amplified controller, use the encoder wheel to select **MONITORING & INFO**. Press the OK key or the encoder wheel to validate.
5. Use the encoder wheel to select **ENCLOSURE CHECK**.

   Beware of sound levels.
   Although the sound pressure levels generated for the ENCLOSURE CHECK are moderate, do not stay within close proximity of the loudspeakers and consider wearing ear protection.
6. Press the OK key or the encoder wheel to launch the ENCLOSURE CHECK.

   The amplified controller generates short sinusoidal signals simultaneously for each connected output.

   The amplified controller displays the results for each output.

www.liveline.be

7. Depending on the displayed results, follow the instructions in the table.

result	interpretation	instructions
OK	measured impedance is within expected range	enclosure is in working order electrically
?	unsupported preset family	only supported enclosures should be tested
NC	Not Connected	if cables are connected: **a.** inspect the cables and connections **b.** go to step 8 (p.41)
NOK	measured impedance is not within expected range	**a.** check that all the prerequisites are met, in particular that the loaded preset corresponds to the connected speaker's family **b.** inspect the cables and connections **c.** go to step 8 (p.41)
UNDEF	measured impedance is undefined	

8. Under NC, NOK and UNDEF results, press and hold the corresponding OUT key.

The amplified controller displays:

- the tested frequencies,
- information on the measured impedance:
  - OPEN for open circuit (found in NC results),
  - SHORT for short circuit (found in NOK results), or
  - a percentage of variation from the expected range (found in NOK and UNDEF results)
- the number of operational transducers out of the total

Low variations from the expected range are acceptable: displayed percentage can be different from 0 and all transducers considered operational.

www.liveline.be

Listening test

enclosure	preset	usable bandwidth
Syva	[SYVA]	87 Hz - 20 kHz
Syva Low	[SYVA LOW_100]	from 40 Hz
Syva Sub	[SYVA SUB_100]	from 27 Hz

Procedure

1. Load the preset on an LA2Xi / LA4X / LA7.16i / LA12X amplified controller.
2. Connect a sinus generator to the amplified controller.

   Risk of hearing damage
   Set a low sound level to start and use ear protection to adjust before testing.
3. Scan the bandwidth focusing on the usable range.
   The sound should remain pure and free of unwanted noise.

Troubleshooting for LF/MF speakers

One or more LF/MF speaker produces distorted, buzzing, rubbing, clicking, muffled or weak sound.

Possible causes

- The screws are not tightened with the appropriate torque.
- There is an air leak in the gasket.
- There is dust on the cone.
- The cone is damaged.
- The surround is torn or delaminated.
- The voice coil or the spider is damaged.

Procedure

1. Perform the speaker disassembly procedure.
2. Visually inspect the cables and the connectors.
3. Visually inspect the speaker cone, the voice coil and the spider.

   If any damage is visible, replace the speaker.
4. Carefully clean the speaker with a dry cloth.
5. Perform the reassembly procedure.
   Replace the speaker gasket and the screws.
   Apply the recommended torque.
6. Repeat the listening test.

   If the problem persists, replace the speaker.

Troubleshooting for HF drivers

One or more HF driver produces high-frequency harmonic distortions, strange vibrations or weak sound.

Possible causes

- There are foreign particles on the air gap.
- The diaphragm is not centered correctly.
- The screws used for reassembly are too loose.
- The diaphragm is damaged.

Procedure

1. Perform the diaphragm disassembly procedure.
2. Visually inspect the diaphragm and the voice coil.

   If any damage is visible, replace the diaphragm.

www.liveline.be

3. Clean the air gap thoroughly.
   Use double-face adhesive tape to remove any particles.
4. Perform the diaphragm reassembly procedure.
   Apply the recommended torque.
5. Repeat the listening test.

   If the problem persists, replace the driver.

www.liveline.be

Rigging procedures

Wall-mounting Syva

type of deployment	wall-mount
rigging accessories	Syva Wall
tools	torque screwdriver
	T30 Torx bit
additional material	2 x M6 screws and anchors (depending on wall material)
min number of operators	1

Secondary safety
Secure a DIN-580 eye bolt to the dedicated insert on the enclosure to implement a secondary safety.

The speakON connector is only accessible if Syva Wall is used with a wedge.

Syva Wall can be mounted on a truss bridge.
Refer to Mounting a truss clamp on Syva Wall (p.51).

Assembly

Procedure

1. Remove the safety pin and divide Syva Wall into base and bracket.

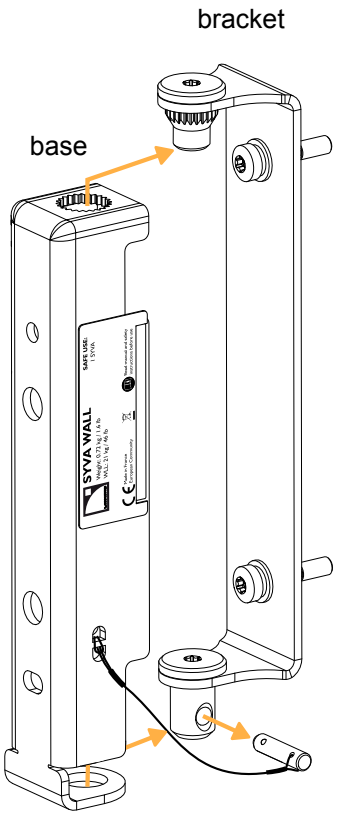

Syva on Syva Wall applies a load of **350 N** on the anchoring points.

2. Secure the base to the wall.

Use a wedge to allow an azimuth angle.

Azimuth angle	15°	30°	45°	60°	75°	90°
Wedge depth	16 mm / 0.6 in	32 mm / 1.2 in	45 mm / 1.8 in	55 mm / 2.2 in	70 mm / 2.8 in	80 mm / 3.1 in

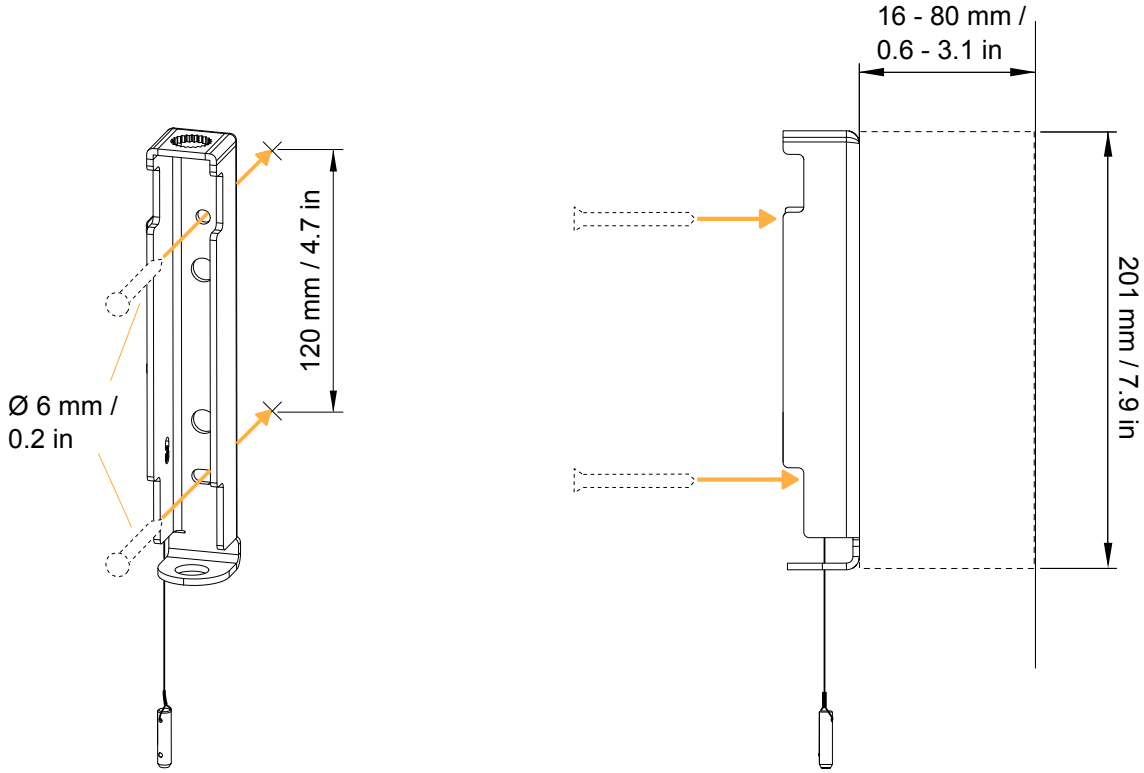

3. Remove the backplate from Syva.

Store plates and unused screws in Syva Cov.

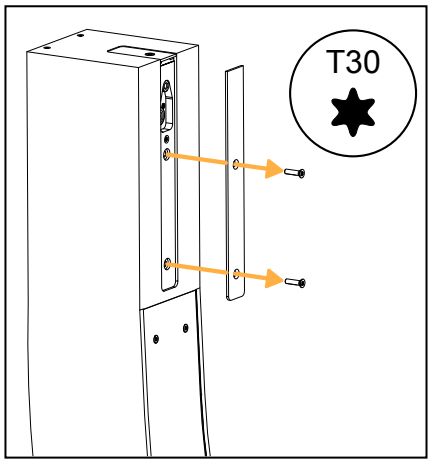

www.liveline.be

4. Secure the Syva Wall bracket to the enclosure.

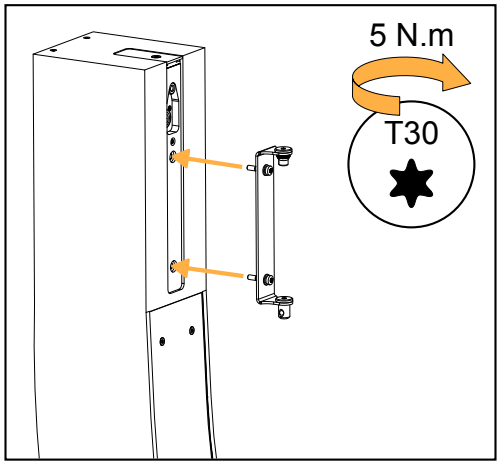

5. Install the enclosure on the base and secure the safety pin.

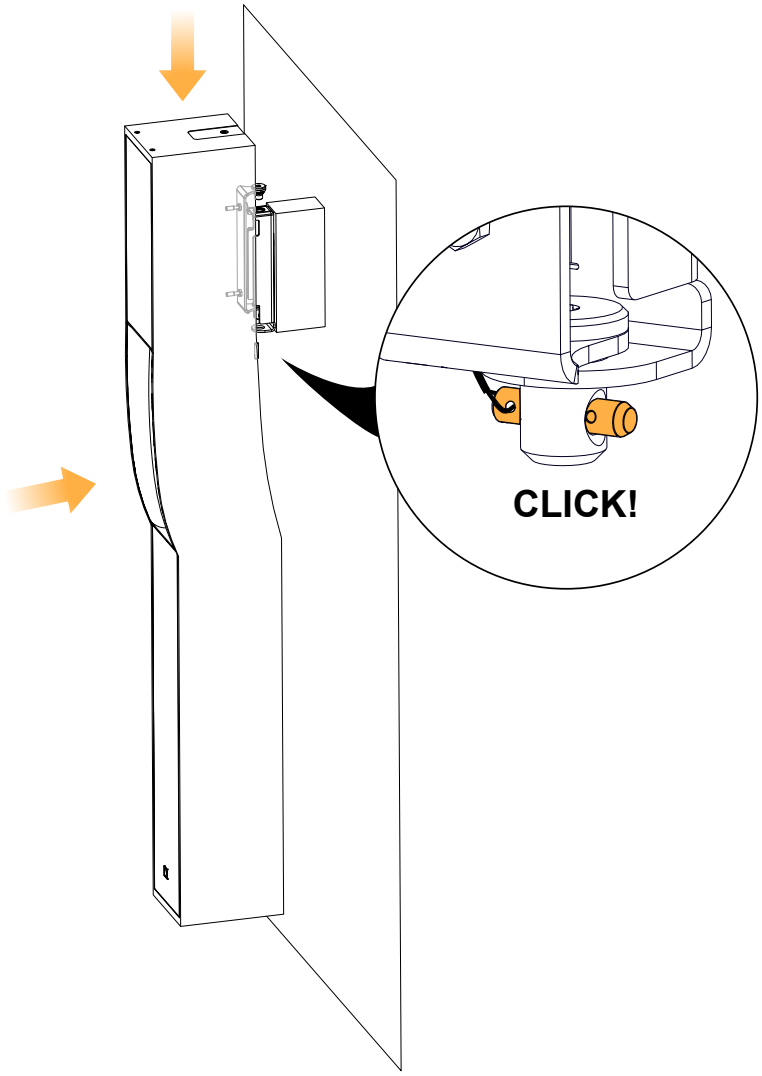

Risk of injury

Secure the safety pin before changing the azimuth angle with Syva Wall.
Do not touch Syva Wall while changing the azimuth angle.

6. Lift the enclosure by the bottom and rotate it to change the azimuth angle.

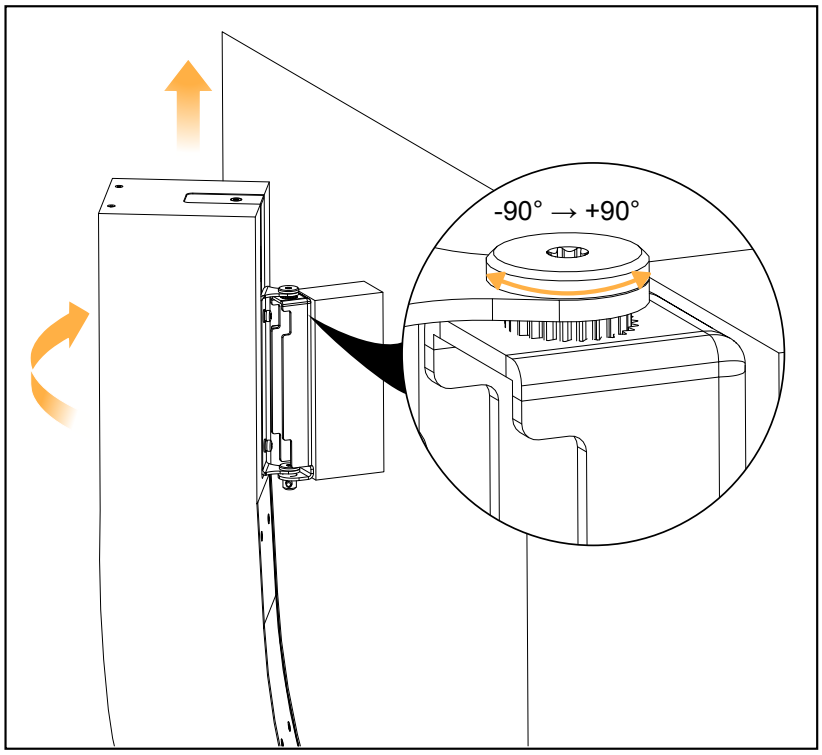

www.liveline.be

Flying Syva

type of deployment	flown
rigging accessories	Syva Bar
	CLAMP250 (optional)
tools	torque screwdriver
	T30 Torx bit
additional material	1 Ø12 mm shackle WLL 1 t (provided)
min number of operators	1

Secondary safety
Secure a DIN-580 eye bolt to the dedicated insert on the enclosure to implement a secondary safety.

Access to the screw terminal is limited after rigging.
Prepare the cabling before rigging the system.

About this task

Available site angles:

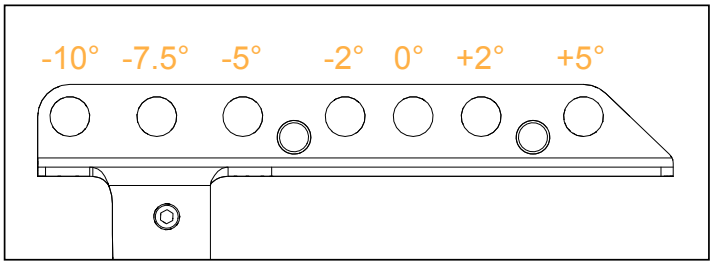

Procedure

Remove the backplate from Syva and secure Syva Bar on the enclosure.

Store plates and unused screws in Syva Cov.

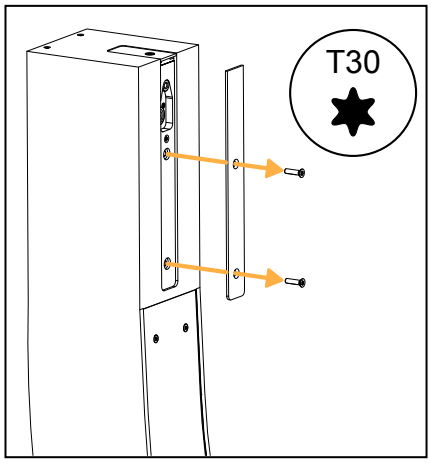

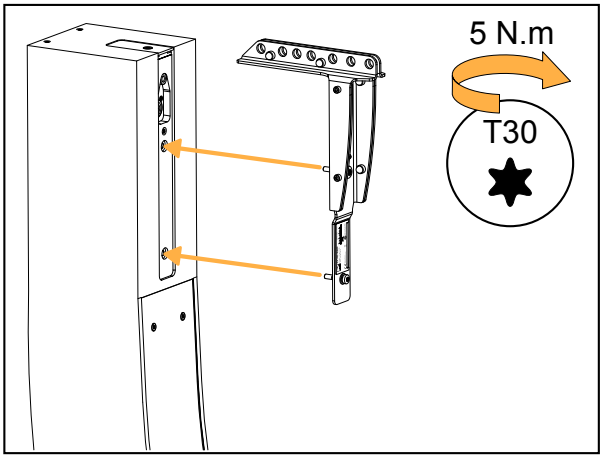

Pole-mounting Syva

type of deployment	pole-mount
rigging accessories	Syva Pole
tools	torque screwdriver
	15 mm (5.9 in) screwdriver extension
	T30 Torx bit
	17 mm wrench
additional material	35 mm pole mount
min number of operators	1

Procedure

1. Remove the backplate from Syva and secure Syva Pole on Syva.

Store plates and unused screws in Syva Cov.

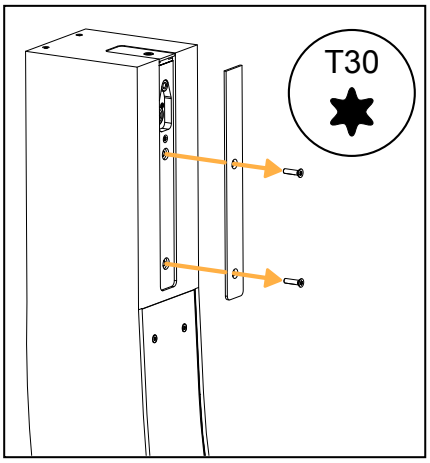

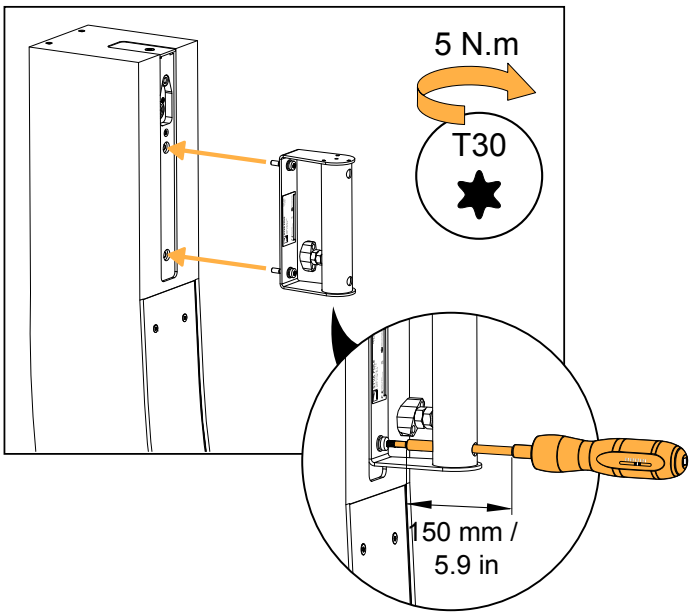

2. Mount the assembly on a pole.
3. Tighten the locking knob and the nut.

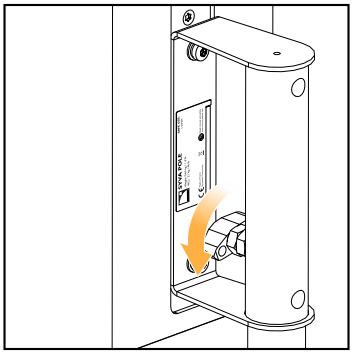

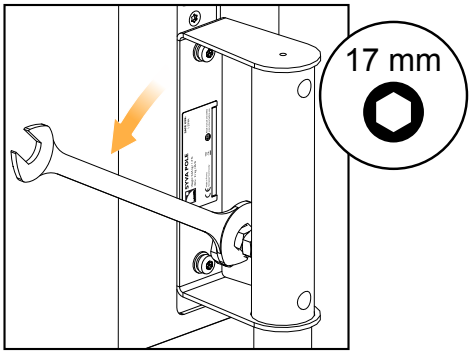

www.liveline.be

Stacking Syva on Syva Low

type of deployment	stacked
rigging accessories	Syva Base
tools	torque screwdriver
	T25 Torx bit
	T30 Torx bit
additional material	4 x 6 mm (0.2 in) screws depending on floor material (optional)
min number of operators	1

Procedure

Risk of crushing injury
Always hold Syva Base by the handle.

Secure Syva Base on the bottom of Syva Low and stack Syva on top.

Store plates and unused screws in Syva Cov.

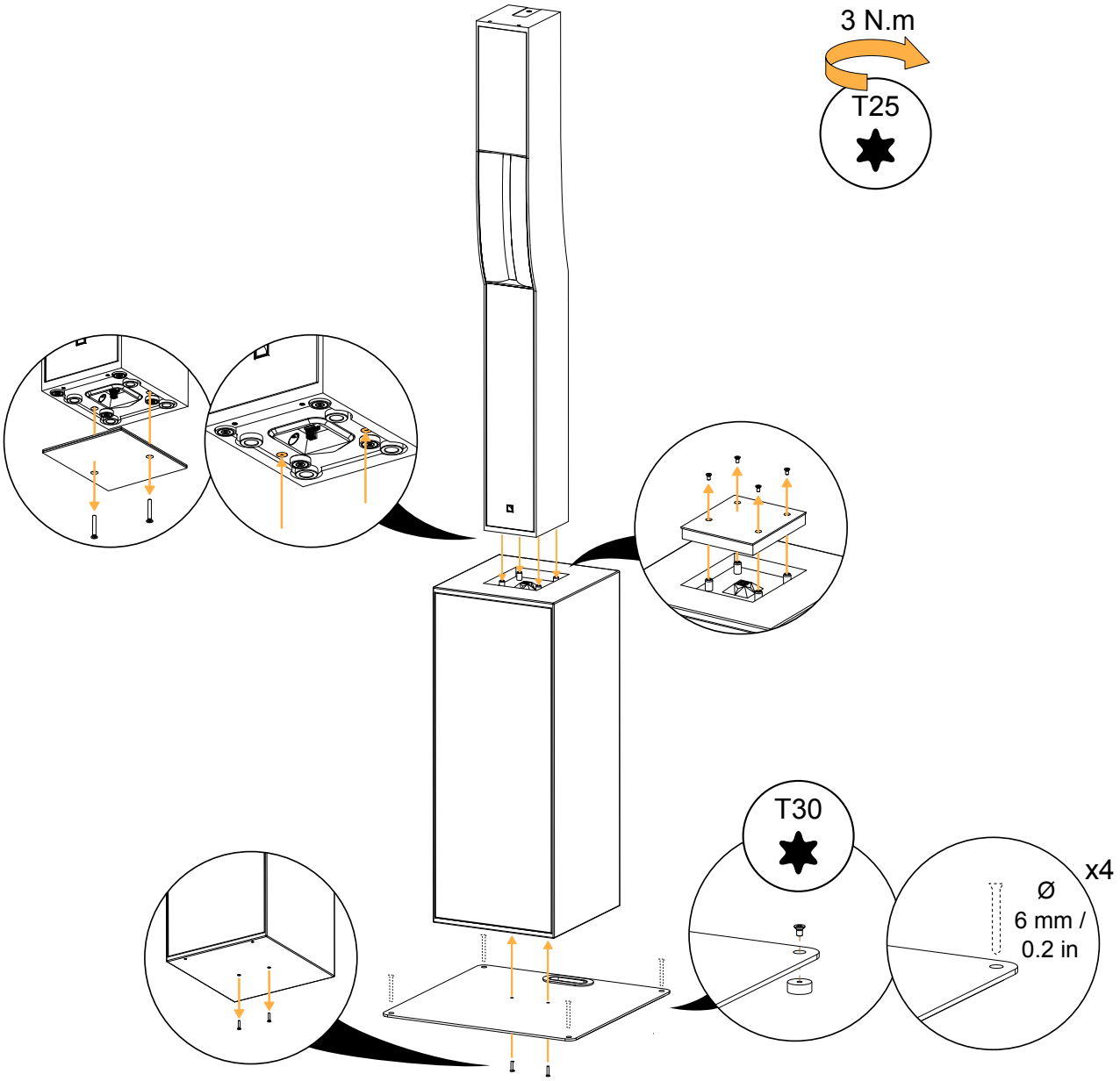

www.liveline.be

Mounting a truss clamp on Syva Wall

type of deployment	flown
rigging accessories	Syva Wall
tools	wrench
additional material	Truss clamp
	M10 bolt with thread-locking device or sealant
min number of operators	1

About this task

Syva Wall can be fitted with a truss clamp to mount Syva on a truss bridge.

Exploded view

Follow the clamp manufacturer's recommendations on maximum torque.

Mount the truss clamp on the base using one of the two M10 holes.

Refer to Wall-mounting Syva (p.44) for subsequent steps.

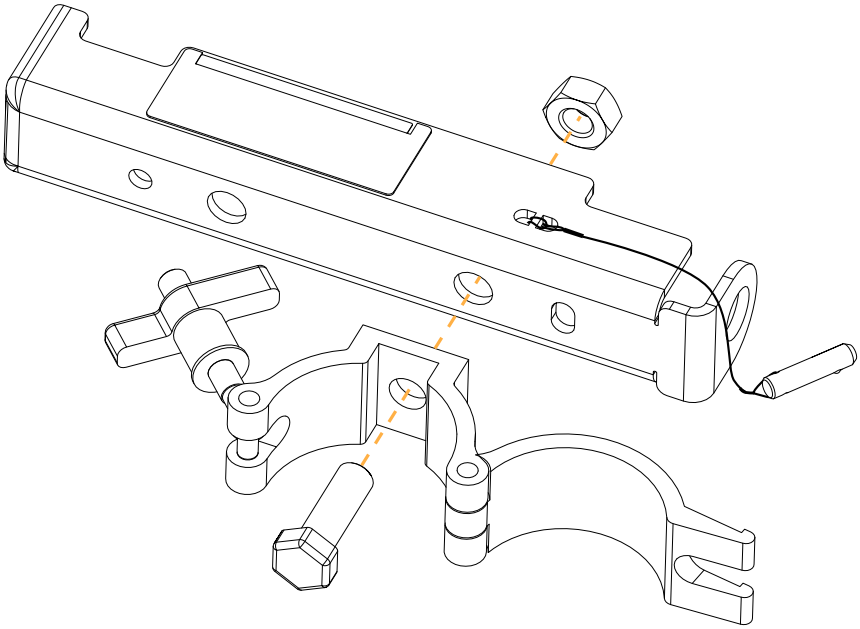

www.liveline.be

Storing Syva Low / Syva Sub in SyvaLF Cov

Procedure

1. Put the cover on the upright subwoofer with the logo on the front.

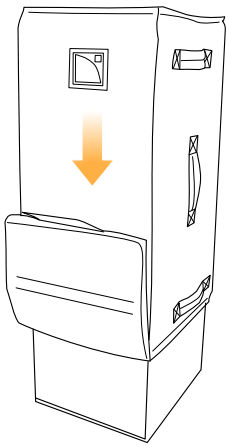

2. Tilt the subwoofer to the side using the handles.

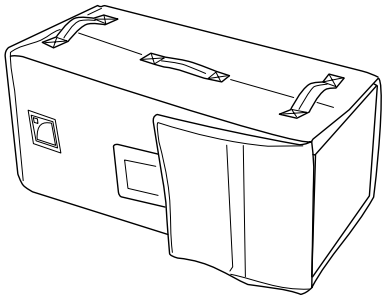

3. Tilt the subwoofer upside-down and close the zipper and the flap.
   Cover the zipper tabs with the flap.

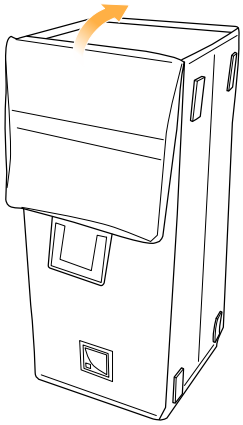

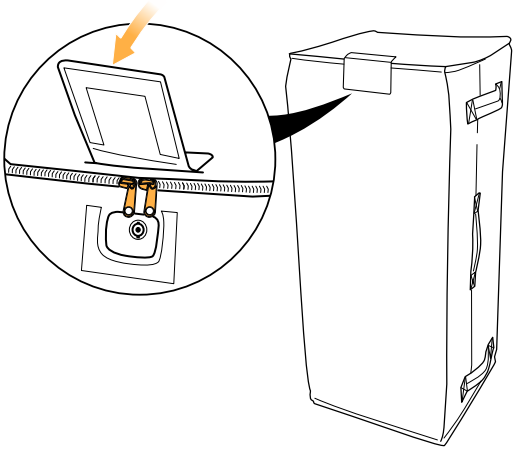

www.liveline.be

Connection to LA amplified controllers

Enclosure drive capacity per amplified controller

Make sure the total number of connected enclosures does not exceed the maximum number of enclosure per controller (refer to the footnote).

	LA2Xi	LA4X	LA7.16i	LA12X
	per output * / total	**per output * / total**	**per output * / total**	**per output * / total**
Syva	1/4 (SE), 1/2 (BTL)	1/4	1/10	3 / 12
Syva Low	1/4 (SE)	1 / 4	1 / 8	2 / 6[1]
Syva Sub	1/4 (SE), 1/2 (BTL)	1 / 4	1 / 16	3 / 12

For Syva / Syva Low / Syva Sub (LA2Xi/LA7.16i)

Refer to the cabling schemes to connect the enclosures to different types of output connectors.

Refer to the **LA2Xi owner's manual** for more information on output configurations.

Terminal block output (LA2Xi SE / LA7.16i)

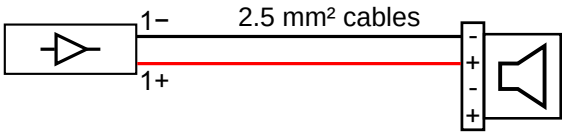

Terminal block output (LA2Xi BTL)

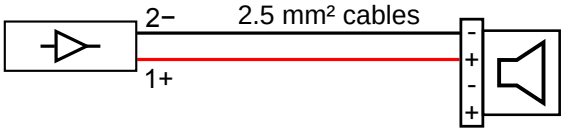

For Syva / Syva Low / Syva Sub (LA4X, LA12X)

Refer to the cabling schemes to connect the enclosures to different types of output connectors.

One-channel speakON output

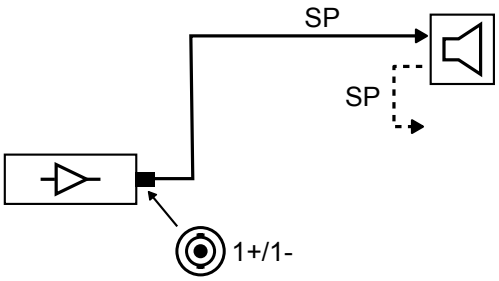

[1] LA12X can drive up to two Syva Low per output, but no more than six per controller at high level.
* For passive loudspeakers, the value corresponds to the number of enclosures in parallel on the output. For active loudspeakers, the value corresponds to the number of sections in parallel on the output.

www.liveline.be

Two-channel speakON output

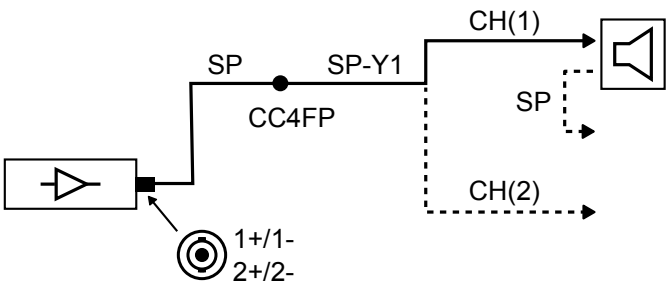

Four-channel CA-COM output

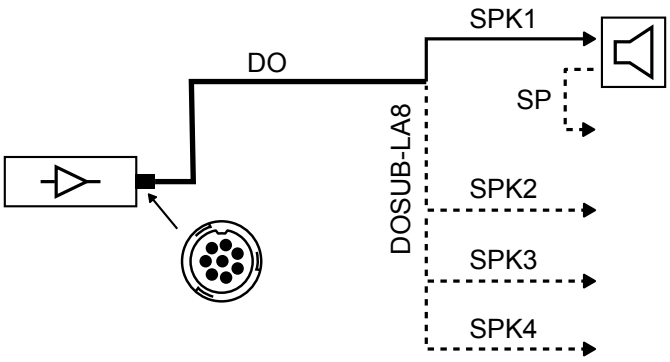

For hybrid configurations

Use [SYVA LOW SYVA] with these cabling schemes.

Terminal block with AutoConnect

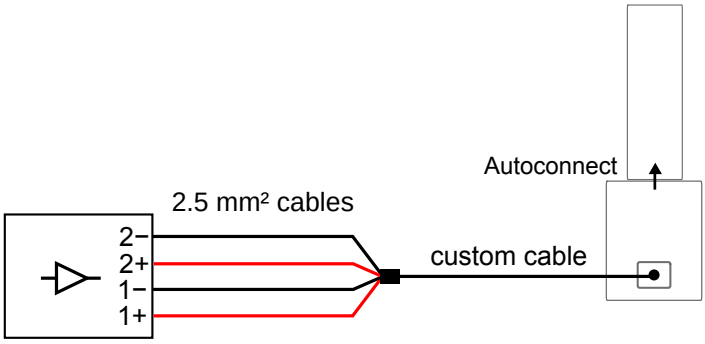

speakON output with AutoConnect

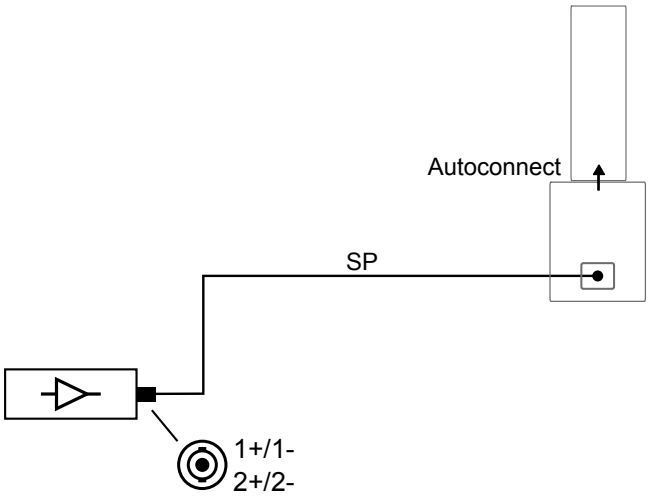

Syva / Syva Low Two-channel speakON output

Risk of damaging the Syva drivers.
Connect CH(1) to Syva Low and CH(2) to Syva.

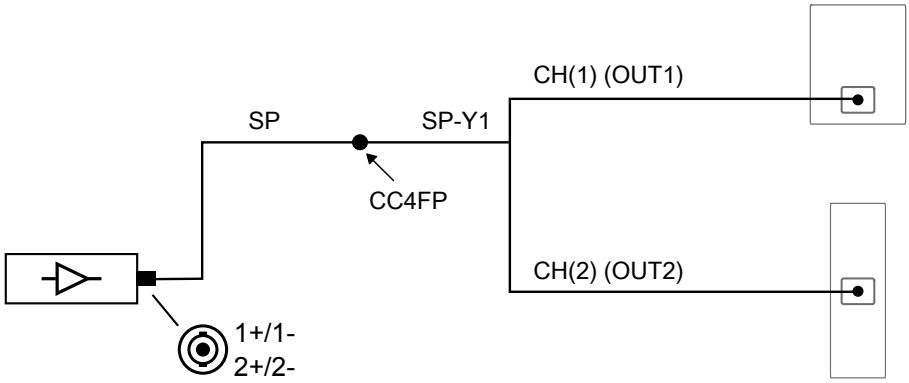

CA-COM output with AutoConnect

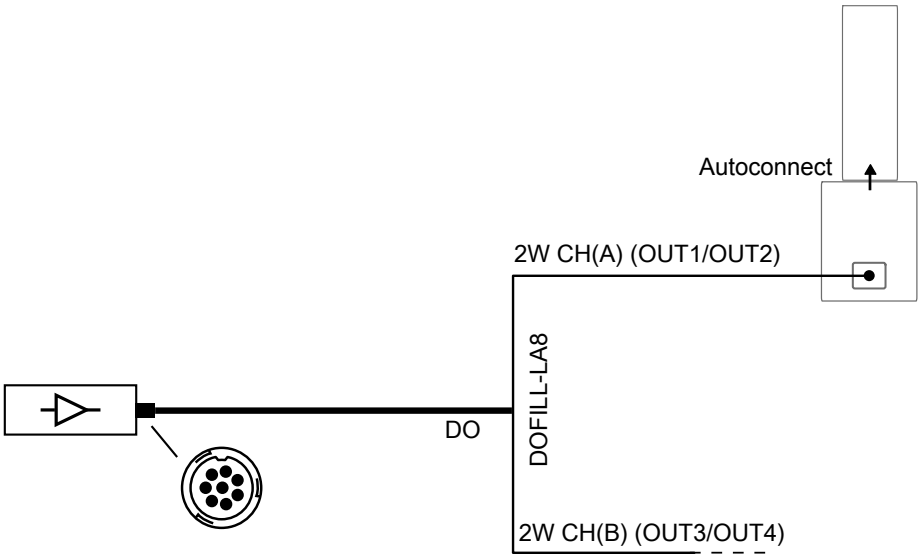

www.liveline.be

CA-COM output with AutoConnect and subwoofers

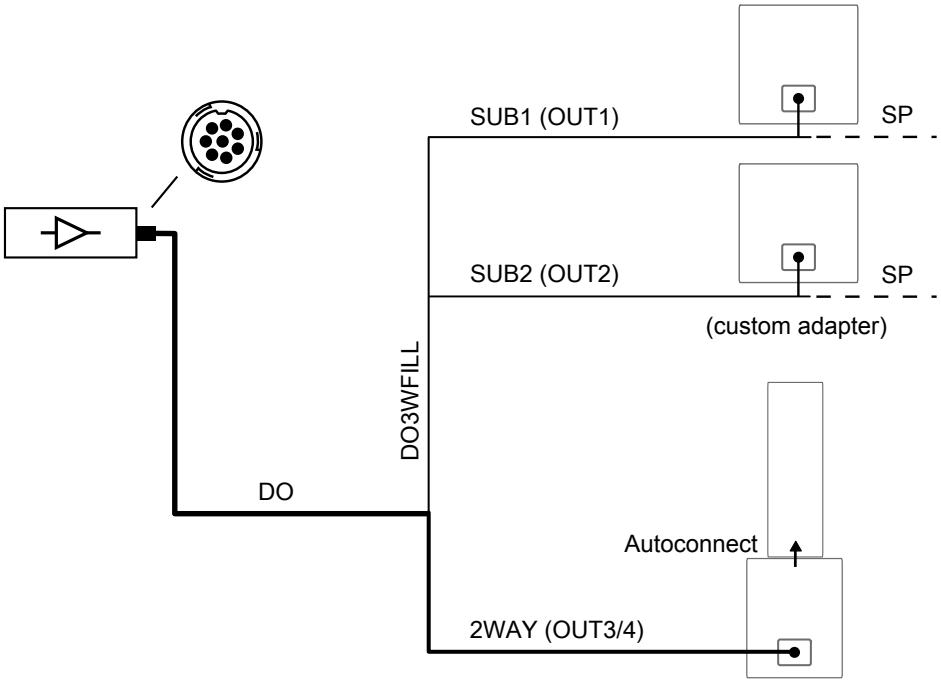

Corrective maintenance

Syva

Disassembly and Reassembly procedures

Place protective material between the enclosure and the floor to avoid scratching the fins.

In order to operate, follow the order outlined here.

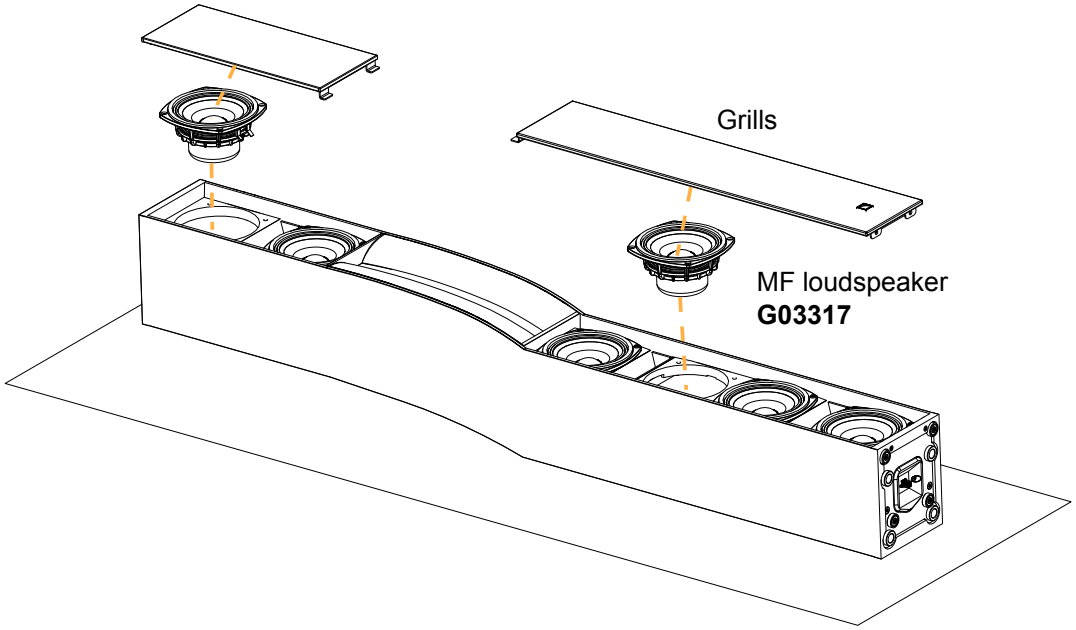

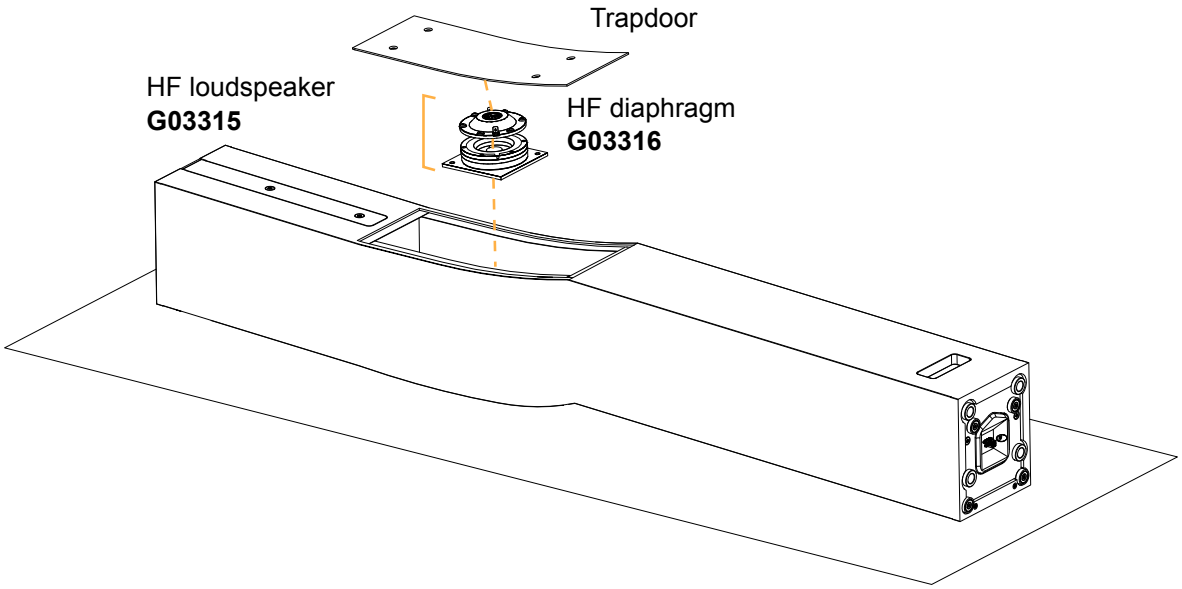

www.liveline.be

D/R - Grills

Tools

- torque screwdriver
- T20 Torx bit
- lever

Repair kits

G03317

KR medium loudspeaker 5" Syva

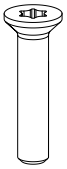

×2

S337

M4×20 Torx

Exploded view

For safety reasons, always use the new screws and spare parts provided in the KR.
If no new screws are available, use blue threadlocker.

Use a lever to remove the grill.

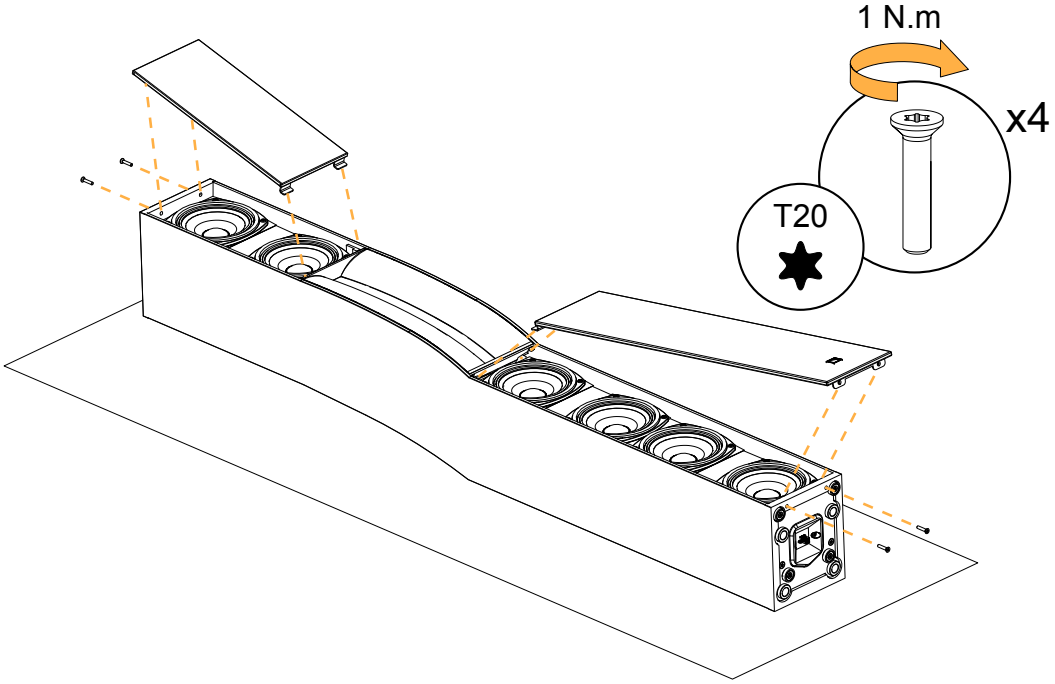

D/R - MF loudspeaker

Tools

- torque screwdriver
- 3 mm hex bit

Repair kits

G03317

KR medium loudspeaker 5" Syva

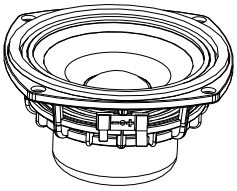

×1

17664

5" MF speaker - 8 ohms

×4

S100145

M4×20 hex

Prerequisite

Grill disassembled.

See D/R - Grills (p.58).

Exploded view

For safety reasons, always use the new screws and spare parts provided in the KR.
If no new screws are available, use blue threadlocker.

Gradually tighten the screws following a star pattern.

Place the connectors toward the vents.

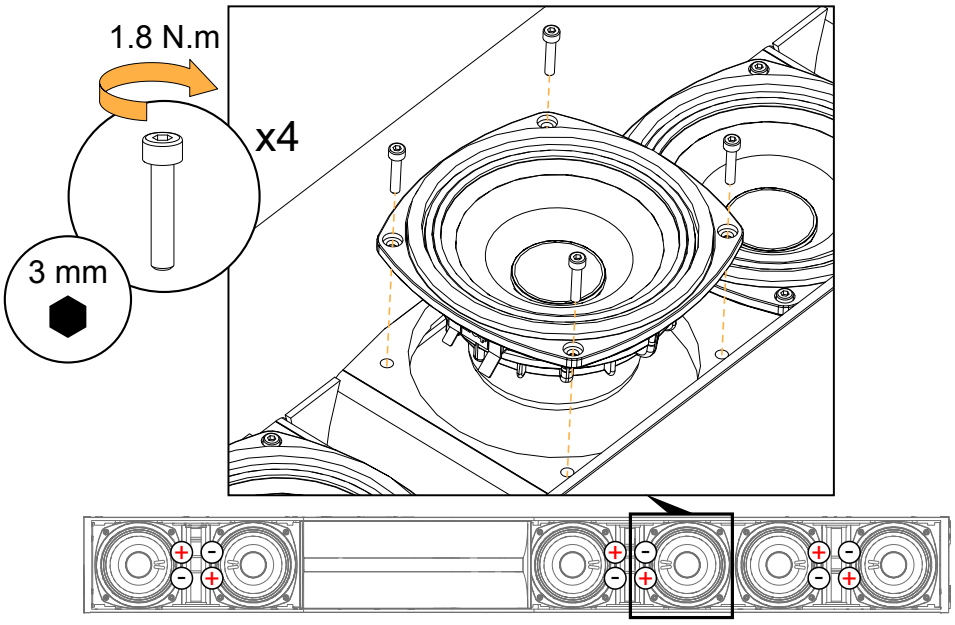

What to do next

Perform the Acoustical check (p.40) procedures.

www.liveline.be

D/R - Trapdoor

Tools

- torque screwdriver
- T25 Torx bit
- lever

Repair kits

G03316 - KR diaphragm 1.75" Syva

or G03315 - KR compression driver 1.75" Syva

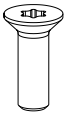

×4

S100086

M5×16 Torx

Prerequisite

The enclosure is placed on its front face.

Place protective material between the enclosure and the floor to avoid scratching the fins.

Exploded view

For safety reasons, always use the new screws and spare parts provided in the KR.
If no new screws are available, use blue threadlocker.

Use a lever to remove the trapdoor.

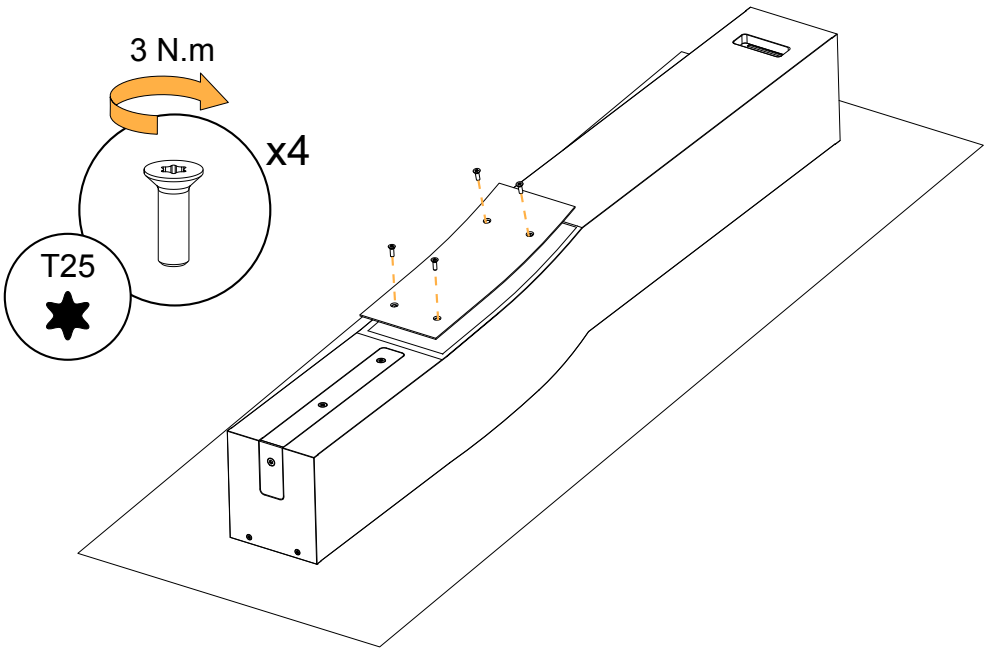

D/R - HF loudspeaker

Tools

- torque screwdriver
- 4 mm hex bit - spherical head
- 10 mm screwdriver extension

Repair kits

G03315

KR compression driver 1.75" Syva

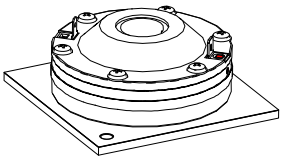

×1

G100087

1" HF speaker assembly - 16 ohms

×2

S342

M5×20 hex

Prerequisite

Trapdoor removed.

See D/R - Trapdoor (p.60).

Exploded view

For safety reasons, always use the new screws and spare parts provided in the KR.
If no new screws are available, use blue threadlocker.

Use a spherical head bit to access the screws of the lateral speakers.

If necessary, unplug the cables to remove the speakers. Refer to Connecting cables to the filter (HF area) (p.63).

Position the positive (red) connector toward the filter.

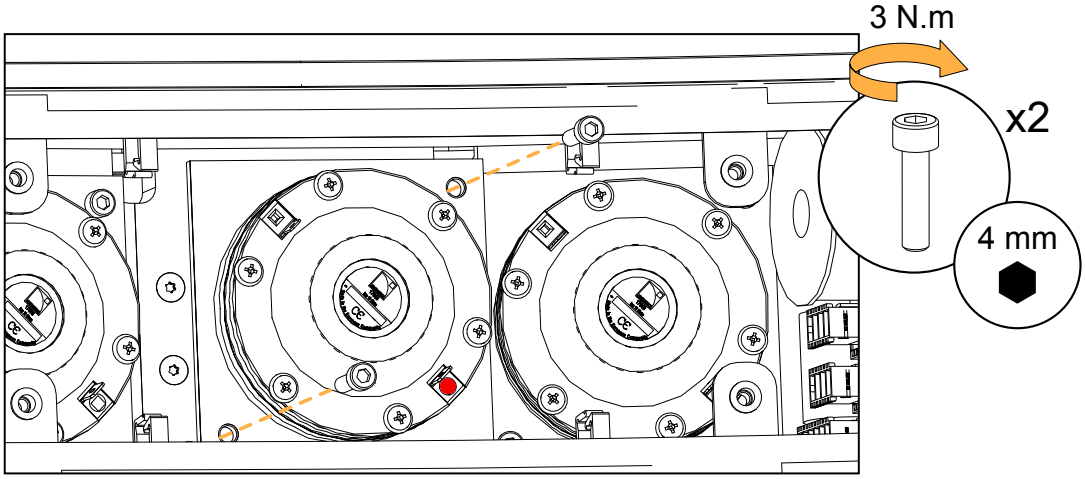

For each speaker, make sure the driver exit and the waveguide mouth fit together.
The speaker plate must be level with the cabinet.

What to do next

Perform the Acoustical check (p.40) procedures.

www.liveline.be

D/R - HF diaphragm

Tools

- torque screwdriver
- T20 Torx bit
- compressed air blower
- double face adhesive tape

Repair kits

G03316

KR diaphragm 1.75" Syva

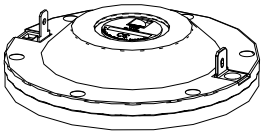

×1

17736

diaphragm kit for 1.75" driver - 16 Ω

×6

S17736

M4×8 Torx

Prerequisite

Trapdoor removed.	See D/R - Trapdoor (p.60).
HF loudspeaker disassembled.	See D/R - HF loudspeaker (p.61)

Exploded view

For safety reasons, always use the new screws and spare parts provided in the KR.

Make sure the air gap is perfectly clean before reassembly.
Use a blower or double face adhesive to remove any particle.
Position the diaphragm assembly with the positive (red) connector aligned with the red mark.
Gradually tighten the screws following a star pattern.

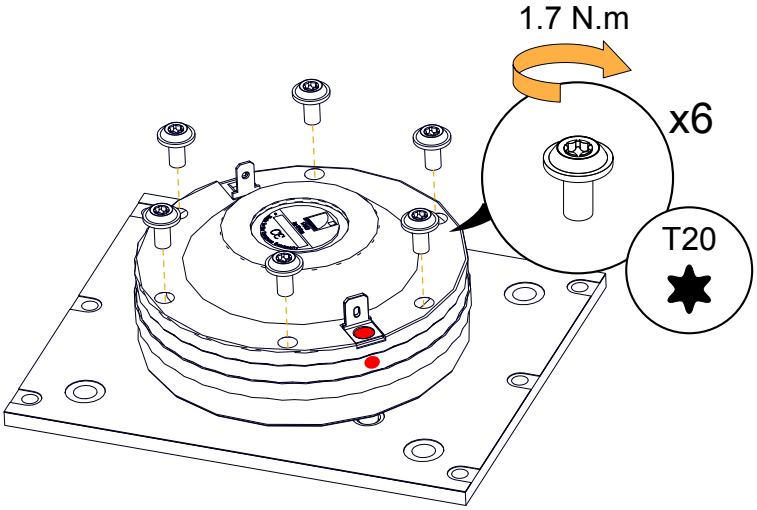

What to do next

Perform the Acoustical check (p.40) procedures.

Cabling Syva

Connecting cables to the filter (HF area)

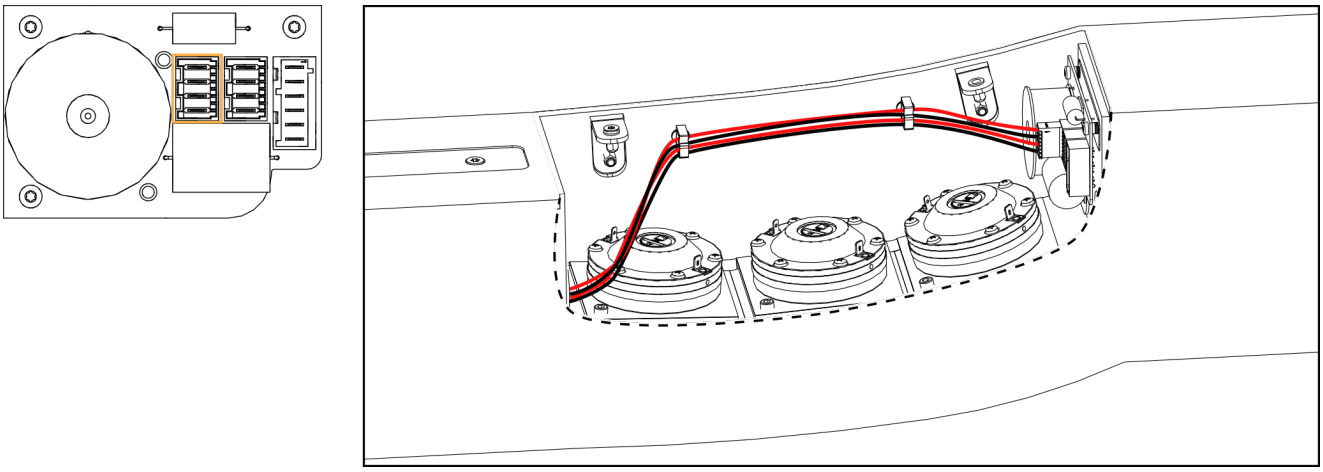

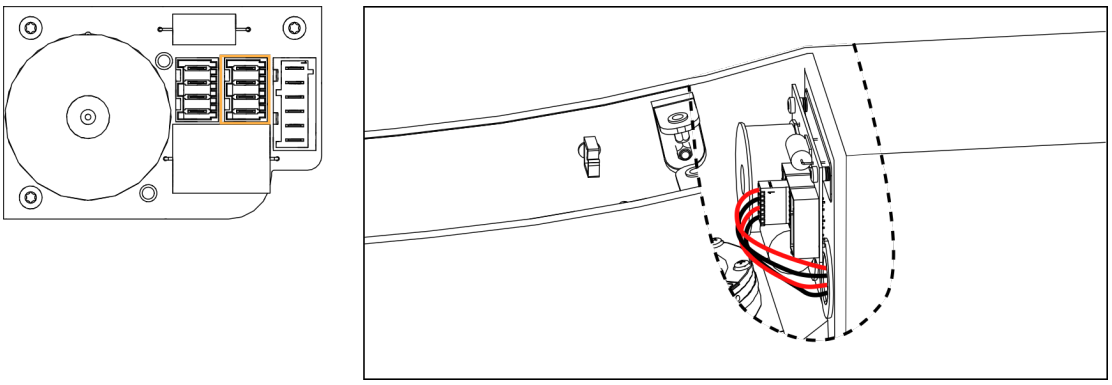

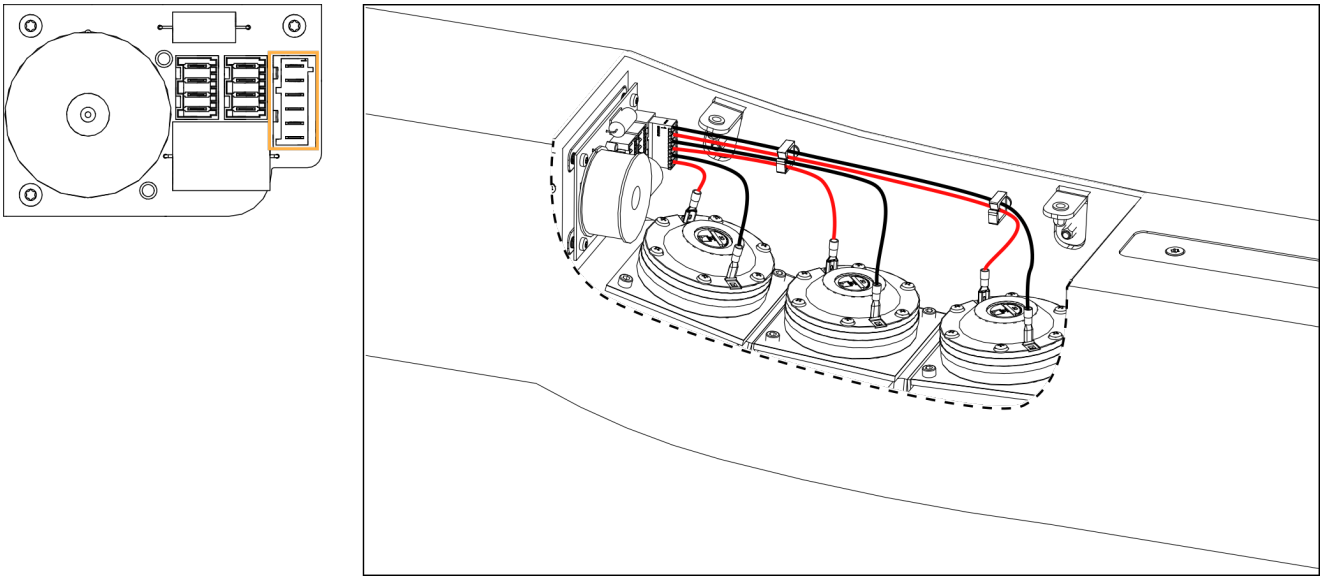

www.liveline.be

Syva Low

Disassembly and Reassembly procedures

In order to operate, follow the order outlined here.

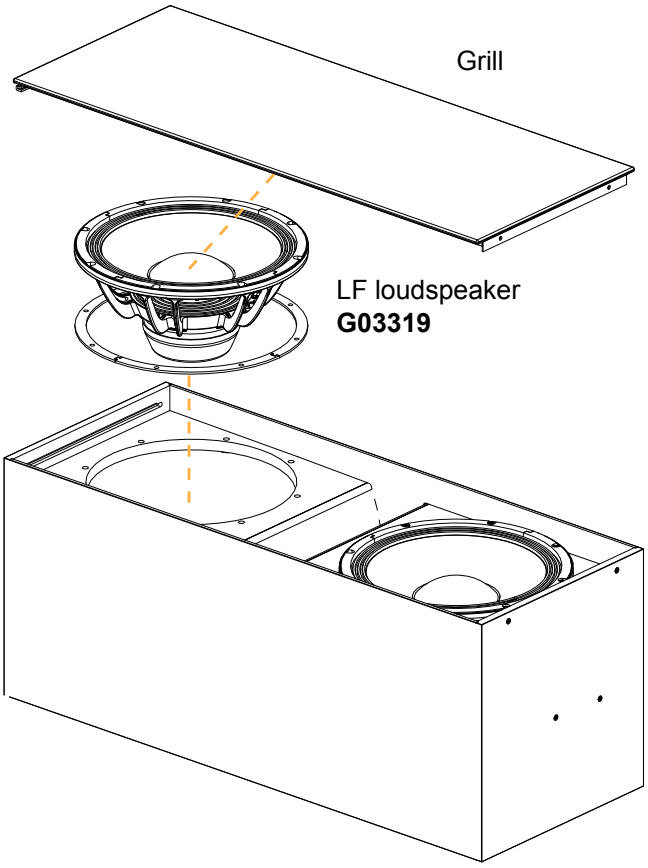

D/R - Grill

Tools

- torque screwdriver
- T20 Torx bit
- lever

Repair kits

G03319

KR LF loudspeaker 12" Syva Low

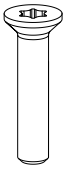

×2

S337

M4×20 Torx

Exploded view

For safety reasons, always use the new screws and spare parts provided in the KR.
If no new screws are available, use blue threadlocker.

Use a lever to remove the grill.

If the gaskets are damaged, remove and replace them.

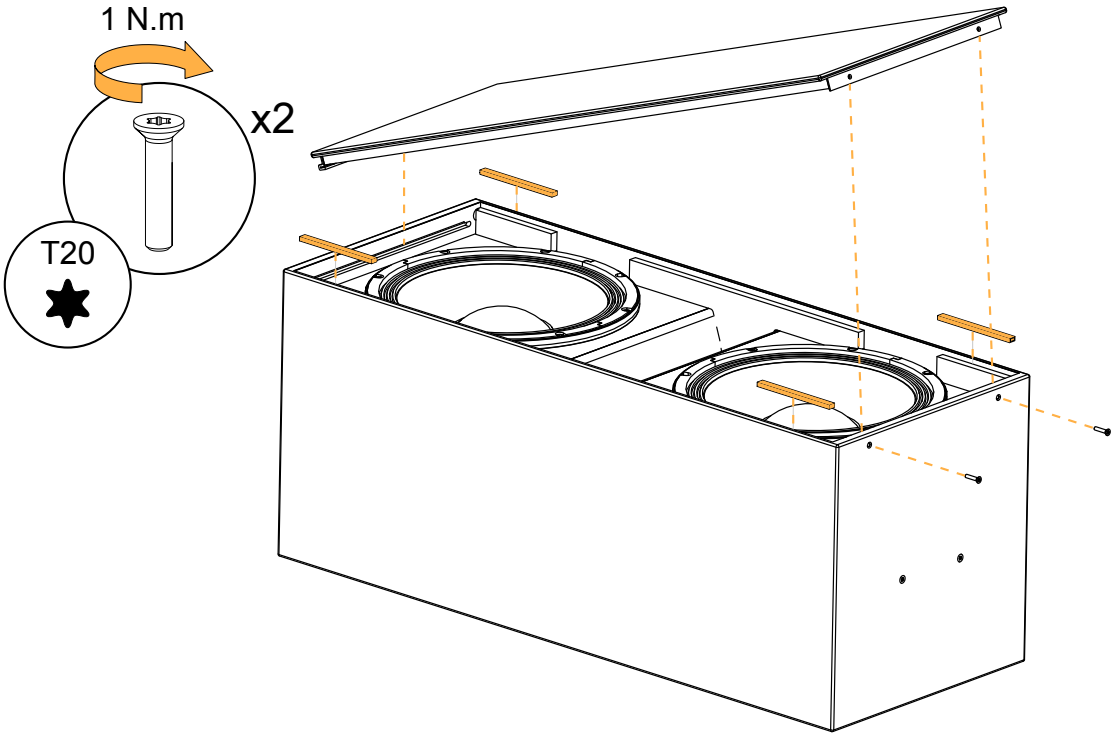

www.liveline.be

D/R - LF loudspeaker

Tools

- torque screwdriver
- 5 mm hex bit

Repair kits

G03319

KR LF loudspeaker 12" Syva Low

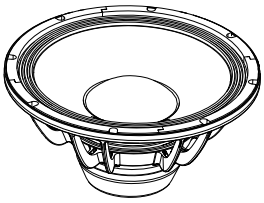

×1

18177

12" LF speaker

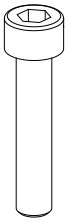

×8

S100054

M6×30 hex

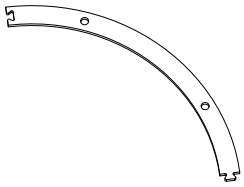

×4

1250

12" speaker gasket

Prerequisite

Grill disassembled.

See D/R - Grill (p.65).

Exploded view

For safety reasons, always use the new screws and spare parts provided in the KR.
If no new screws are available, use blue threadlocker.

Gradually tighten the screws following a star pattern.

If the speaker gasket is damaged, remove and replace it.

Position the connectors toward the vent.

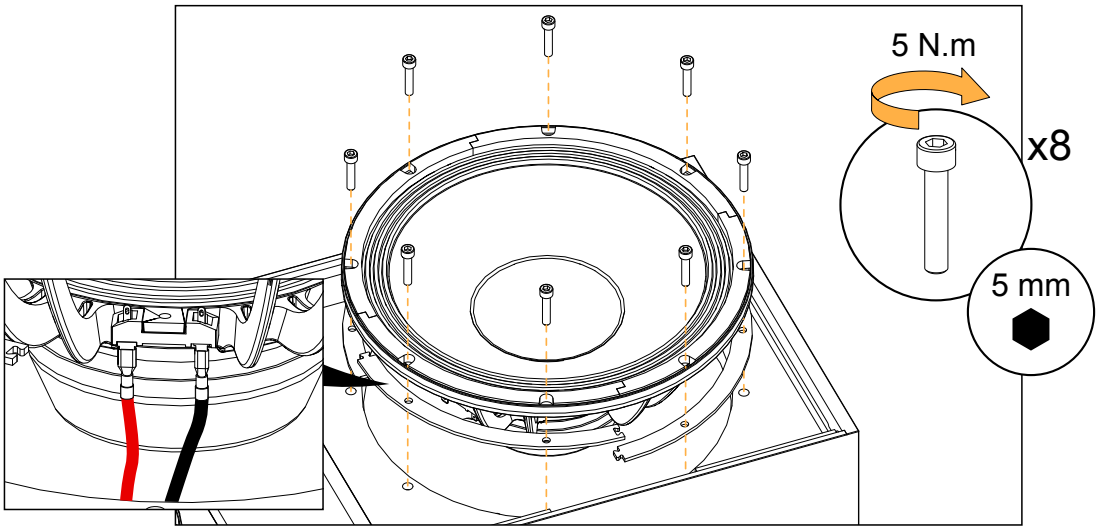

What to do next

Perform the Acoustical check (p.40) procedures.

www.liveline.be

Syva Sub

Disassembly and Reassembly procedures

In order to operate, follow the order outlined here.

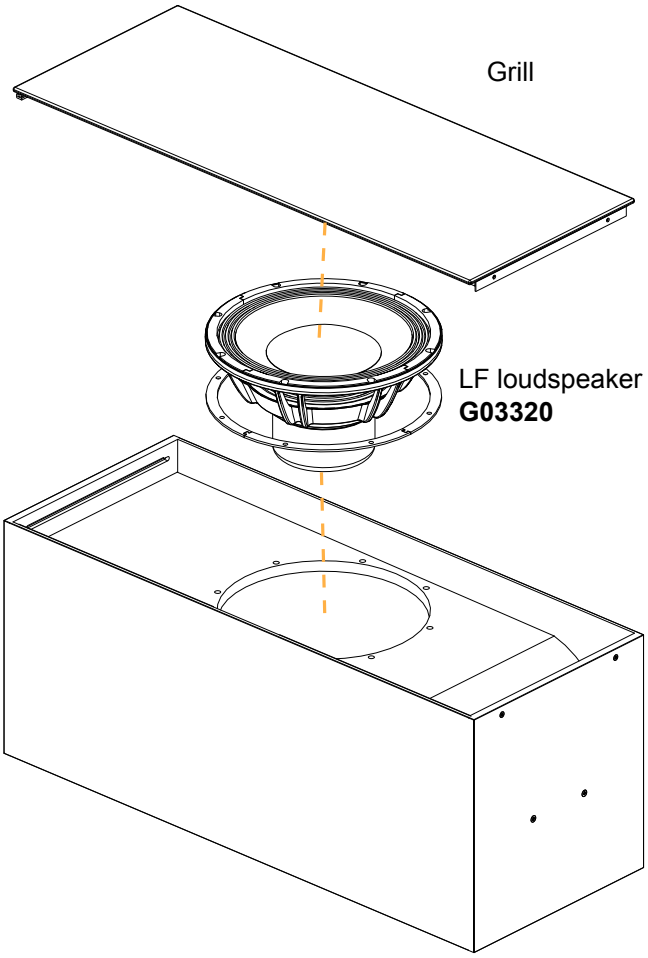

www.liveline.be

D/R - Grill

Tools

- torque screwdriver
- T20 Torx bit
- lever

Repair kits

G03320

KR LF loudspeaker 12" Syva Sub

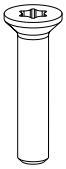

×2

S337

M4×20 Torx

Exploded view

For safety reasons, always use the new screws and spare parts provided in the KR.
If no new screws are available, use blue threadlocker.

Use a lever to remove the grill.

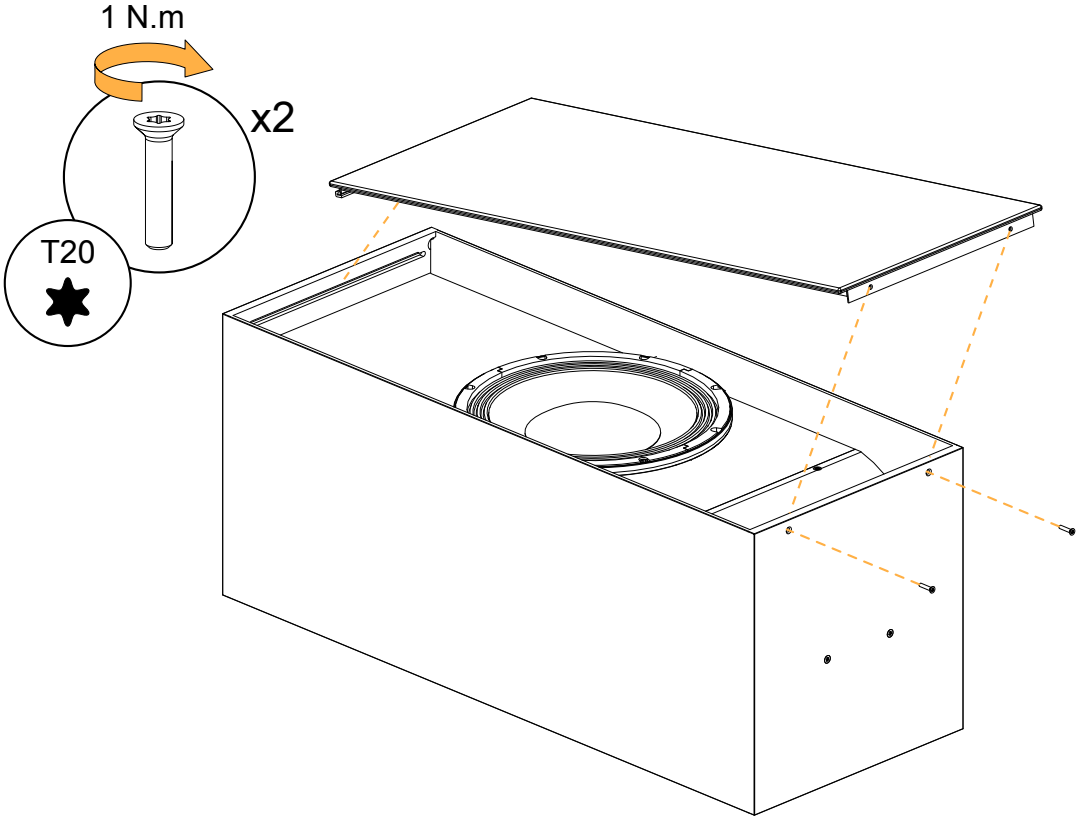

D/R - LF loudspeaker

Tools

- torque screwdriver
- 5 mm hex bit

Repair kits

G03320

KR LF loudspeaker 12" Syva Sub

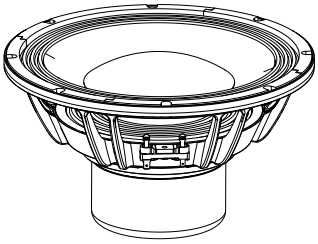

×1

17760

12" LF speaker - 8 ohms

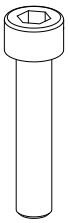

×8

S100054

M6×30 hex

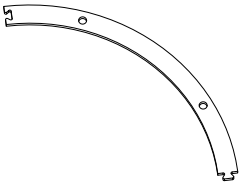

×4

1250

12" speaker gasket

Prerequisite

Grill disassembled.

See D/R - Grill (p.68).

Exploded view

For safety reasons, always use the new screws and spare parts provided in the KR.
If no new screws are available, use blue threadlocker.

Gradually tighten the screws following a star pattern.

If the speaker gasket is damaged, remove and replace it.

Position the connectors toward the top of the enclosure.

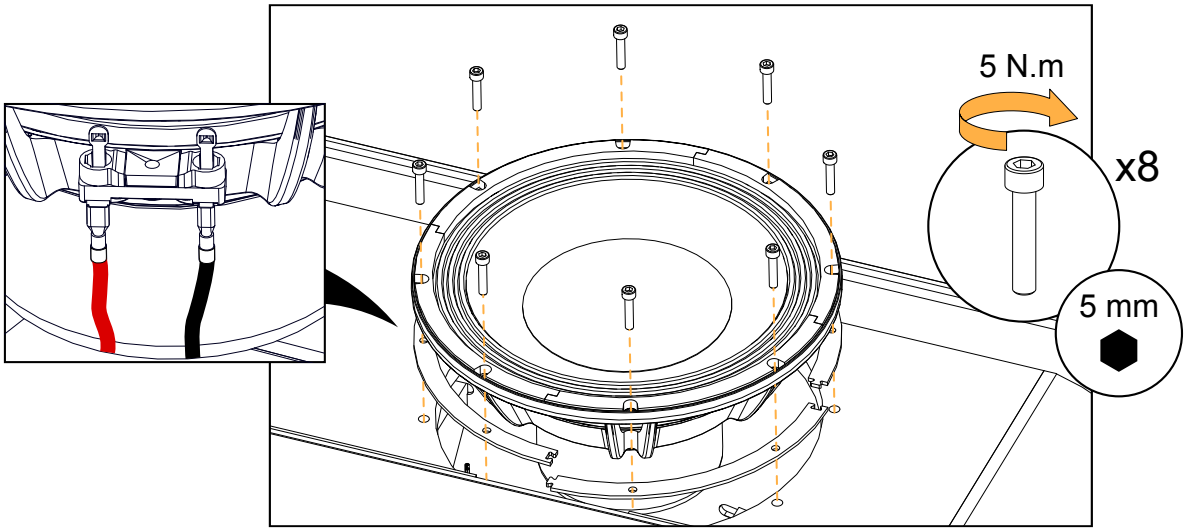

What to do next

Perform the Acoustical check (p.40) procedures.

www.liveline.be

Specifications

Syva specifications

Description	2-way-passive enclosure: 6 x 5'' LF + 3 x 1.75'' HF diaphragm, amplified by LA2Xi / LA4X / LA7.16i / LA12X
Usable bandwidth (-10 dB)	87 Hz - 20 kHz ([SYVA])
Maximum SPL[1]	137 dB ([SYVA]) with LA2Xi (bridge mode) / LA4X / LA12X
	130 dB ([SYVA]) with LA2Xi
Nominal directivity (-6 dB)	vertical: +5°/-21°
	horizontal: 140°
Transducers	MF: 6 × 5" cone drivers
	HF: 3 × 1.75", diaphragm compression drivers
Acoustical load	MF: bass-reflex, L-Vents
	HF: DOSC waveguide, L-Fins
Nominal impedance	8 Ω
Connectors	IN: 1 4-point speakON and1 2-point screw terminal
	1 AutoConnect
Rigging and handling	DIN580-compatible M8 threaded insert
	2 integrated inserts for rigging accessory
Weight (net)	21 kg / 46 lb
Cabinet	premium grade Baltic beech and birch plywood
Front	coated steel grill
	acoustically neutral 3D fabric
Finish	dark grey brown Pantone 426 C
	pure white RAL 9010
	custom RAL code on special order
IP	IP54

[1] Peak level measured at 1 m under free field conditions using pink noise with crest factor 4 (preset specified in brackets).

Syva dimensions

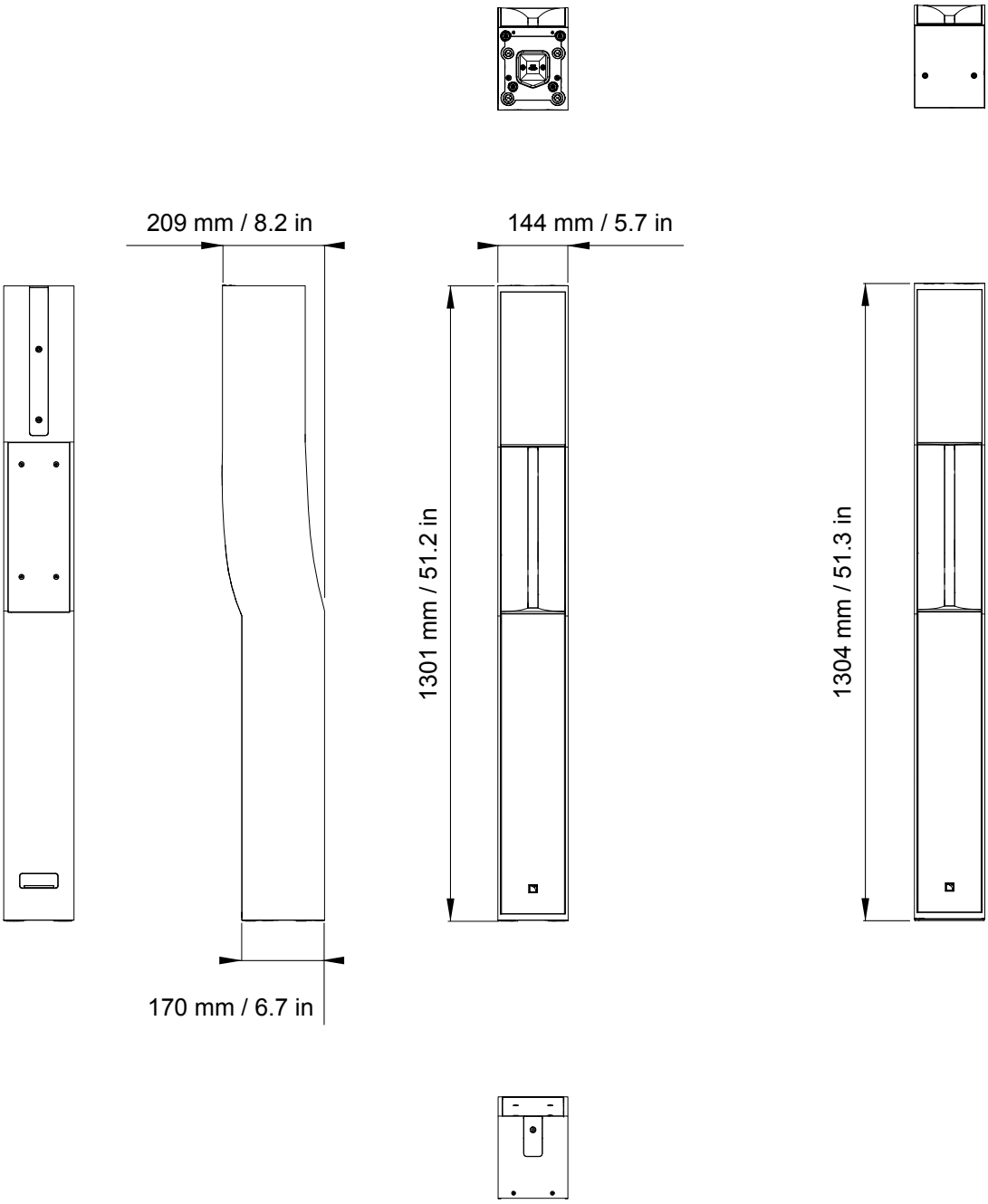

www.liveline.be

Syva Low specifications

Description	High power low frequency subwoofer: 2 x 12'' LF, amplified by LA2Xi / LA4X / LA7.16i / LA12X
Low frequency limit (-10 dB)	40 Hz ([SYVA LOW_100])
Maximum SPL[1]	137 dB ([SYVA LOW_100]) with LA4X / LA12X
	131 dB ([SYVA LOW_100]) with LA2Xi
Transducers	2 × 12" cone drivers
Acoustical load	bass-reflex, L-Vents
Nominal impedance	4 Ω
Connectors	IN: 1 × 4-point speakON
	1AutoConnect
Weight (net)	29 kg / 64 lb
Cabinet	premium grade Baltic beech and birch plywood
Front	coated steel grill
	acoustically neutral 3D fabric
Finish	dark grey brown Pantone 426 C
	pure white RAL 9010
	custom RAL code on special order
IP	IP55

[1] Peak level at 1 m under half space conditions using pink noise with crest factor 4 (preset specified in brackets).

Syva Low dimensions

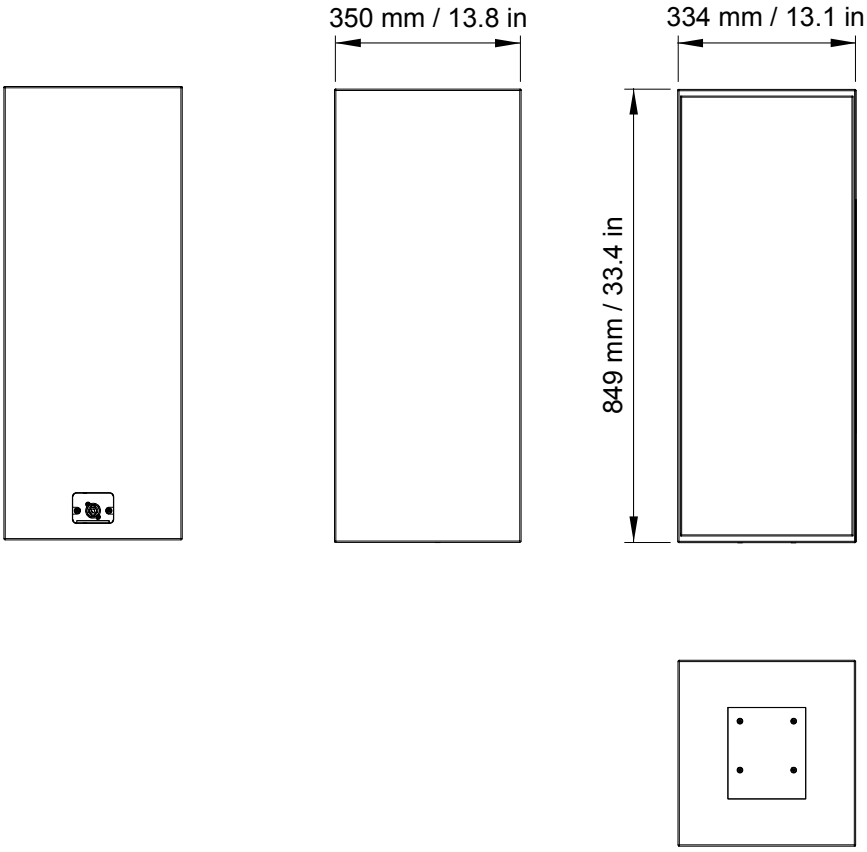

www.liveline.be

Syva on Syva Low specifications

Description	hybrid configuration, amplified by LA2Xi / LA4X / LA7.16i / LA12X
Usable bandwidth (-10 dB)	42 Hz - 20 kHz ([SYVA LOW SYVA])
Maximum SPL[1]	142 dB ([SYVA LOW SYVA]) with LA2Xi (bridge mode) / LA4X / LA12X
	136 dB ([SYVA LOW SYVA]) with LA2Xi
Connectors	IN: 4-point speakON
Weight (net)	50 kg / 110 lb

[1] Peak level at 1 m under half space conditions using pink noise with crest factor 4 (preset specified in brackets).

Syva on Syva Low dimensions

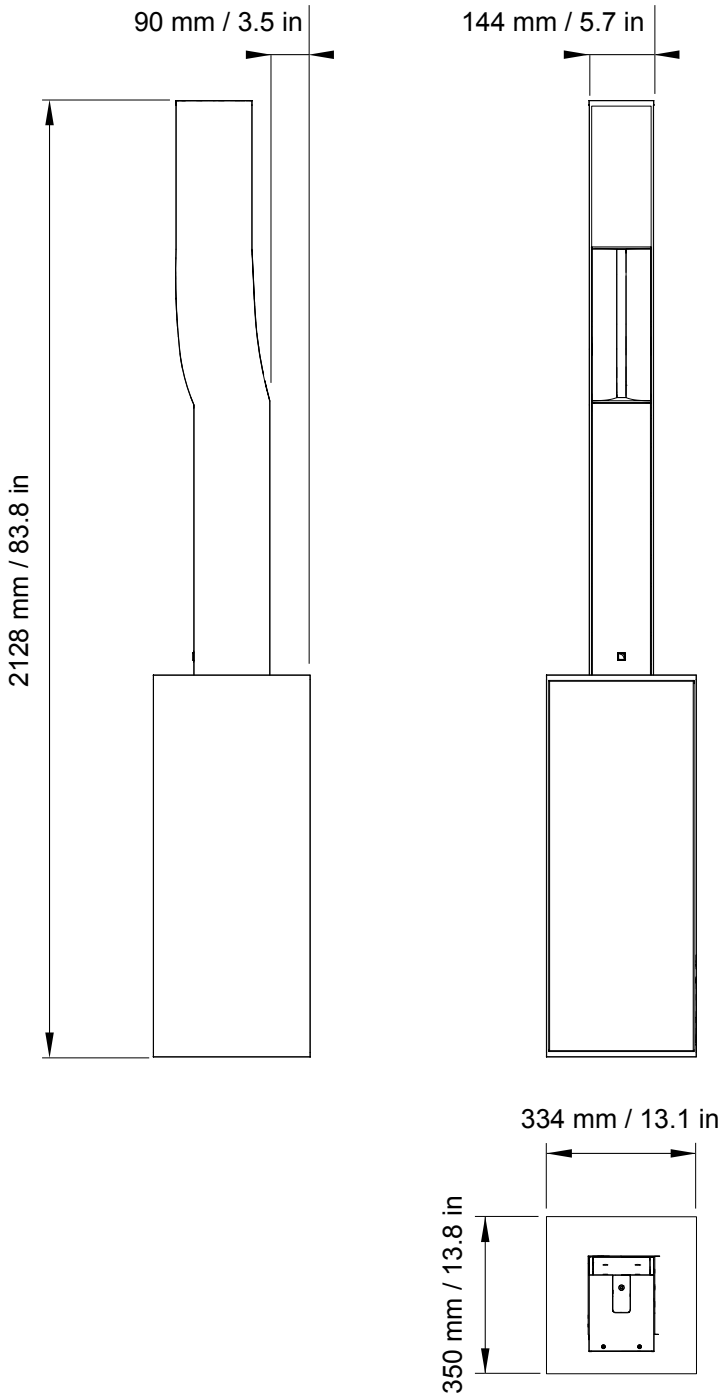

www.liveline.be

Syva Sub specifications

Description	Infra low frequency subwoofer: 1 x 12'' LF, amplified by LA2Xi / LA4X / LA7.16i / LA12X
Low frequency limit (-10 dB)	27 Hz ([SYVA SUB_100])
Maximum SPL[1]	128 dB ([SYVA SUB_100]) with LA2Xi (bridge mode) / LA4X / LA12X
	123 dB ([SYVA SUB_100]) with LA2Xi
Transducers	1 × 12" cone driver
Acoustical load	bass-reflex, L-Vents
Nominal impedance	8 Ω
Connectors	IN: 1 × 4-point speakON
	1 AutoConnect
Weight (net)	27 kg / 60 lb
Cabinet	premium grade Baltic beech and birch plywood
Front	coated steel grill
	acoustically neutral 3D fabric
Finish	dark grey brown Pantone 426 C
	pure white RAL 9010
	custom RAL code on special order
IP	IP55

[1] Peak level at 1 m under half space conditions using pink noise with crest factor 4 (preset specified in brackets).

Syva Sub dimensions

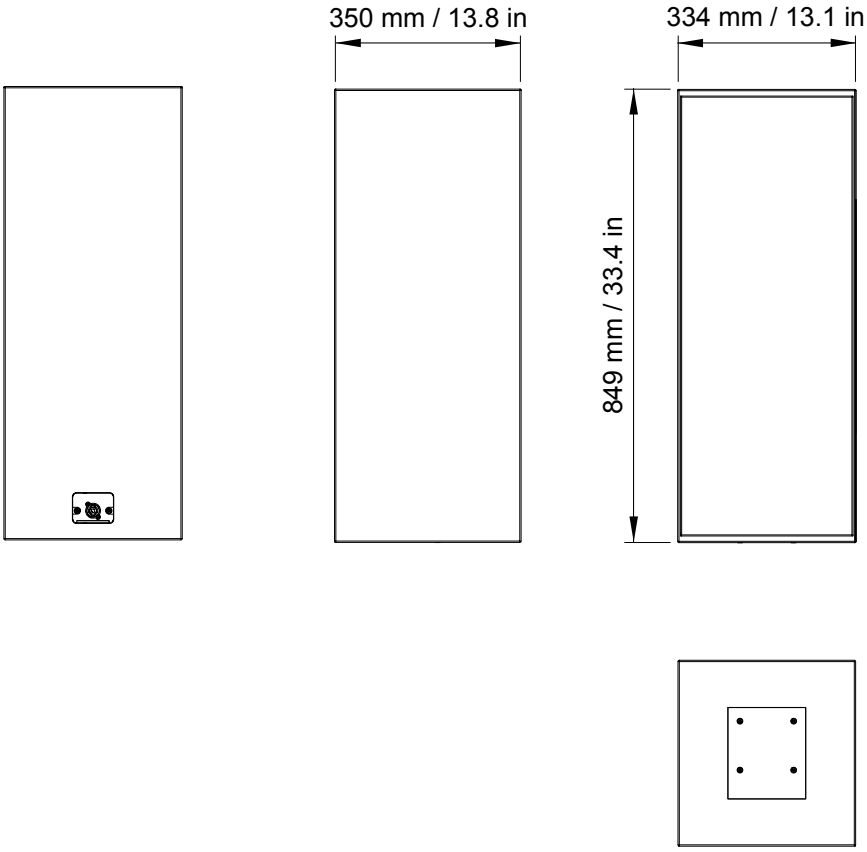

www.liveline.be

Syva Wall specifications

Description	Wall-mount for Syva
Weight (net)	0.72 kg / 1.6 lb
Material	high grade steel with anti-corrosion coating

Syva Wall dimensions

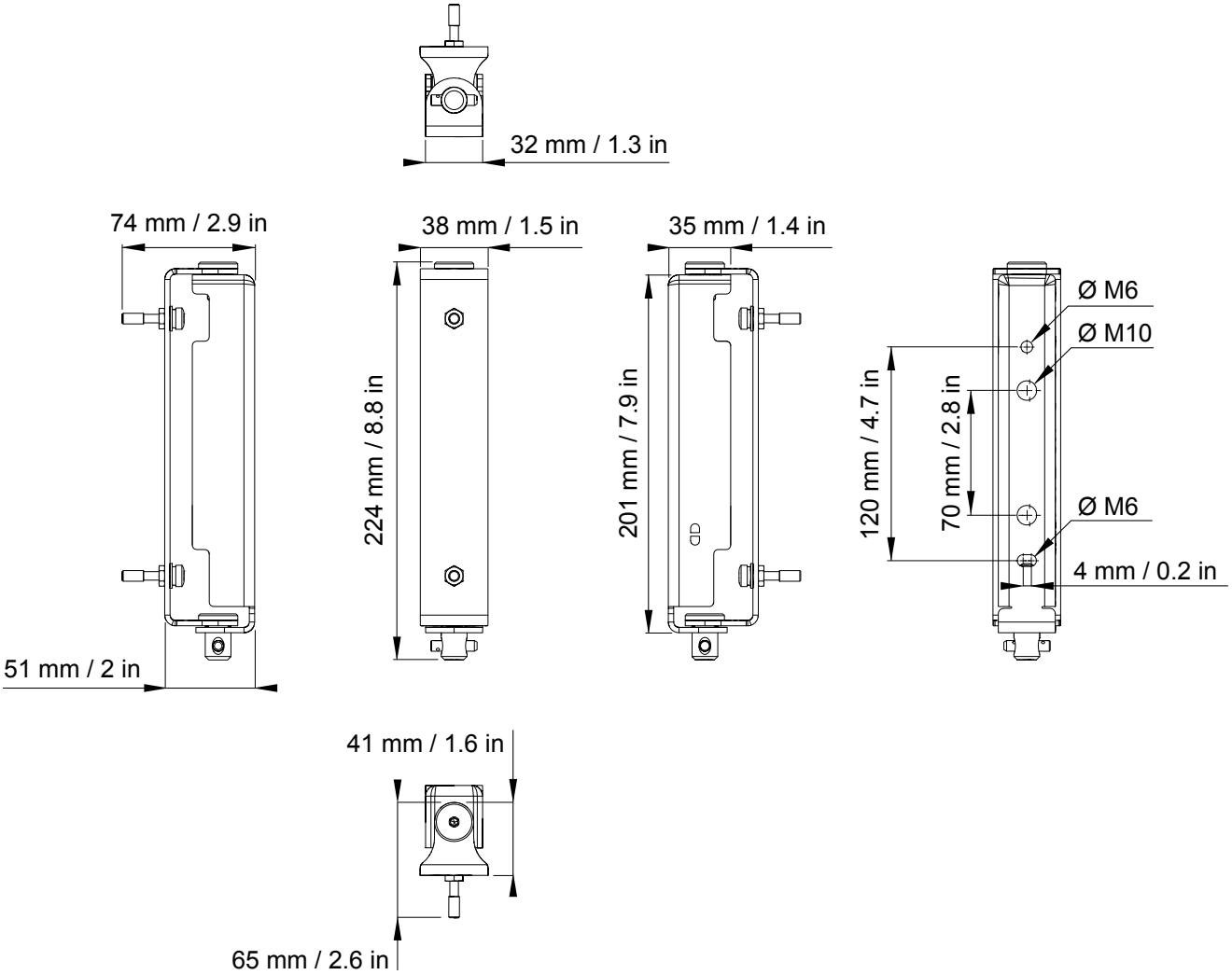

www.liveline.be

Syva Base specifications

Description	Baseplate for Syva system
Weight (net)	11 kg / 24 lb
Material	high grade steel with anti-corrosion coating

Syva Base dimensions

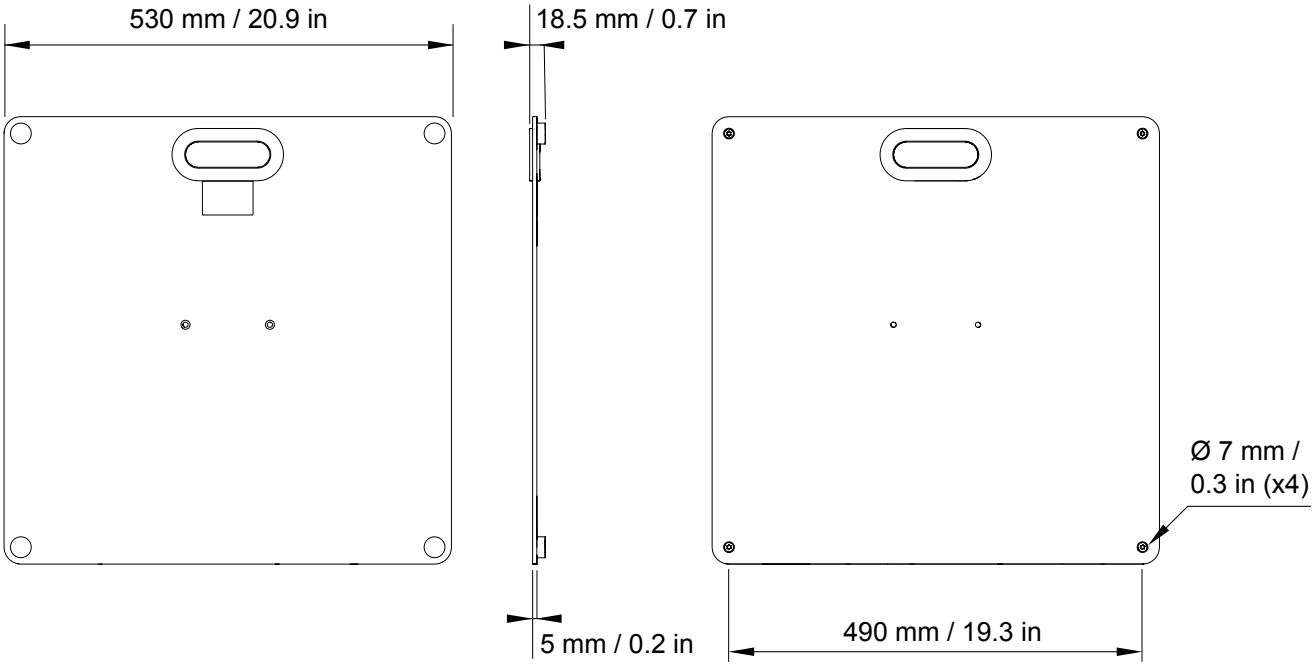

www.liveline.be

Syva Pole specifications

Description	Pole-mount adapter for Syva
Weight (net)	0.8 kg / 1.8 lb
Material	high grade steel with anti-corrosion coating

Syva Pole dimensions

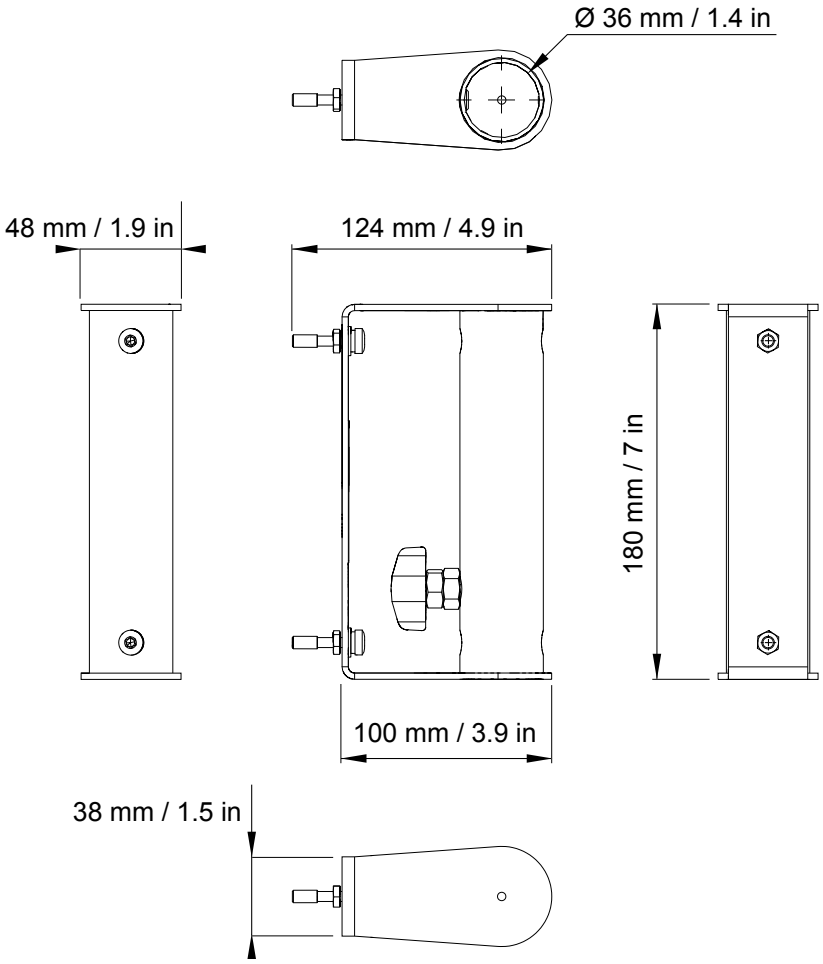

www.liveline.be

Syva Bar specifications

Description	Rigging bar for Syva
Weight (net)	1.3 kg / 2.9 lb
Material	high grade steel with anti-corrosion coating

Syva Bar dimensions

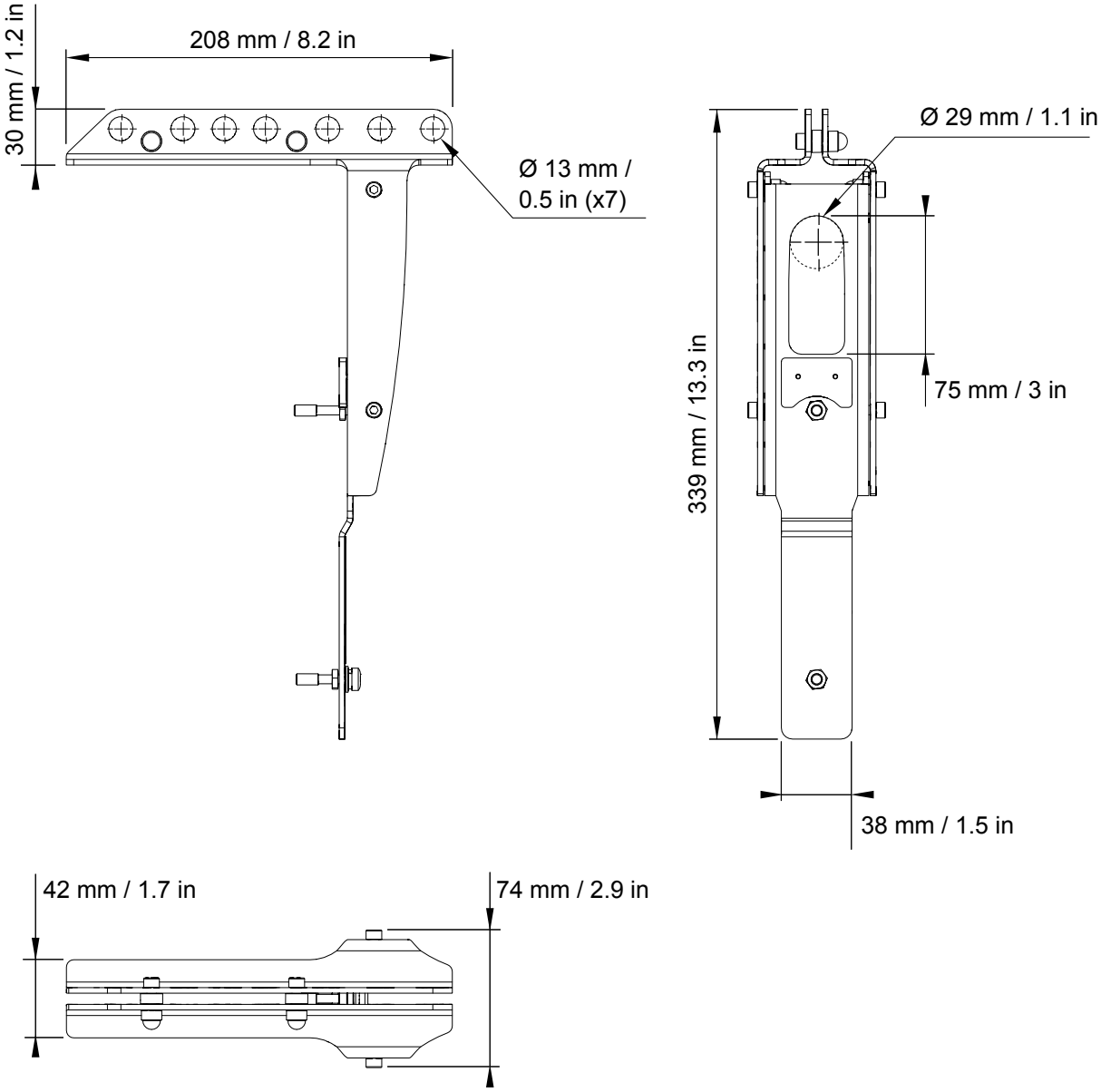

www.liveline.be

Recommendation for speaker cables

Follow the recommended maximum length for loudspeaker cables to ensure minimal SPL attenuation.

Cable quality and resistance

Only use high-quality fully insulated speaker cables made of stranded copper wire.

Use cables with a gauge offering low resistance per unit length and keep the cables as short as possible.

The table below provides the recommended maximum length for loudspeaker cables depending on the cable gauge and on the impedance load connected to the amplifier.

cable gauge			**recommended maximum length**					
			8 Ω load		**4 Ω load**		**2.7 Ω load**	
mm ^{2}	SWG	AWG	m	ft	m	ft	m	ft
2.5	15	13	30	100	15	50	10	33
4	13	11	50	160	25	80	17	53
6	11	9	74	240	37	120	25	80

Use the more detailed L-Acoustics calculation tool to evaluate cable length and gauge based on the type and number of enclosures connected. The calculation tool is available on our website:

https://www.l-acoustics.com/installation-tools/

www.liveline.be

L-Acoustics
13 rue Levacher Cintrat - 91460 Marcoussis - France
+33 1 69 63 69 63 - info@l-acoustics.com
www.l-acoustics.com

L-ACOUSTICS
GROUP